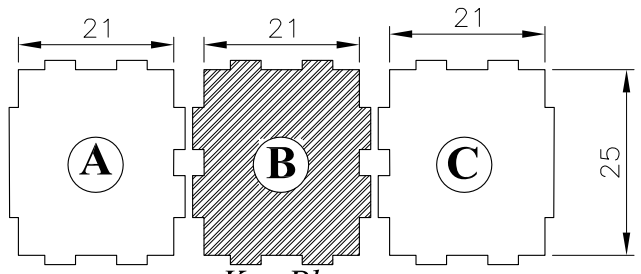

Key Plan

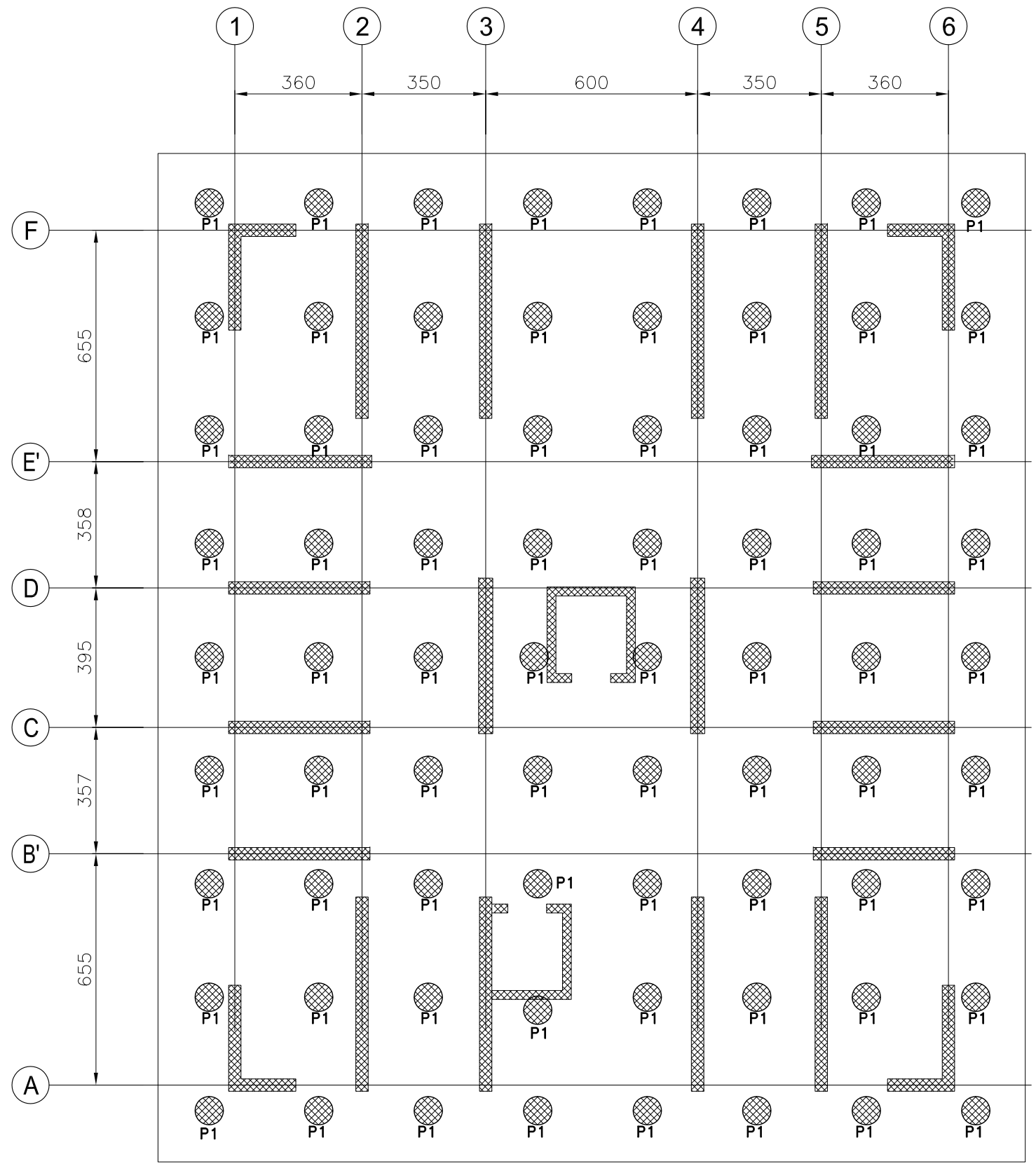

NOTES:

1. CONCRETE STRENGTH (Fc')=5000psi(350kg/cm2)
2. REBAR STRENGTH (Fy)=60000psi(4800kg/cm2)

1 FOUNDATION PILING PLAN
SCALE: 1:150

DRAWING BY:	ABDUL WADOUD		GULISTAN RESIDENTIAL BLOCKS G7(16+1 STORIES PART)	PILING PLAN STRUCTURAL DRAWINGS	SHEET NO:	S-02
DESIGN BY:	KANISHKA KABIR					
CHECKED BY:	ENG ZAHER					

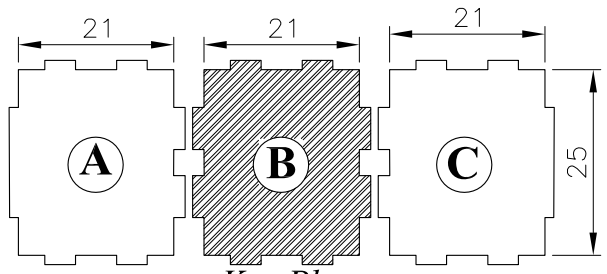

Key Plan

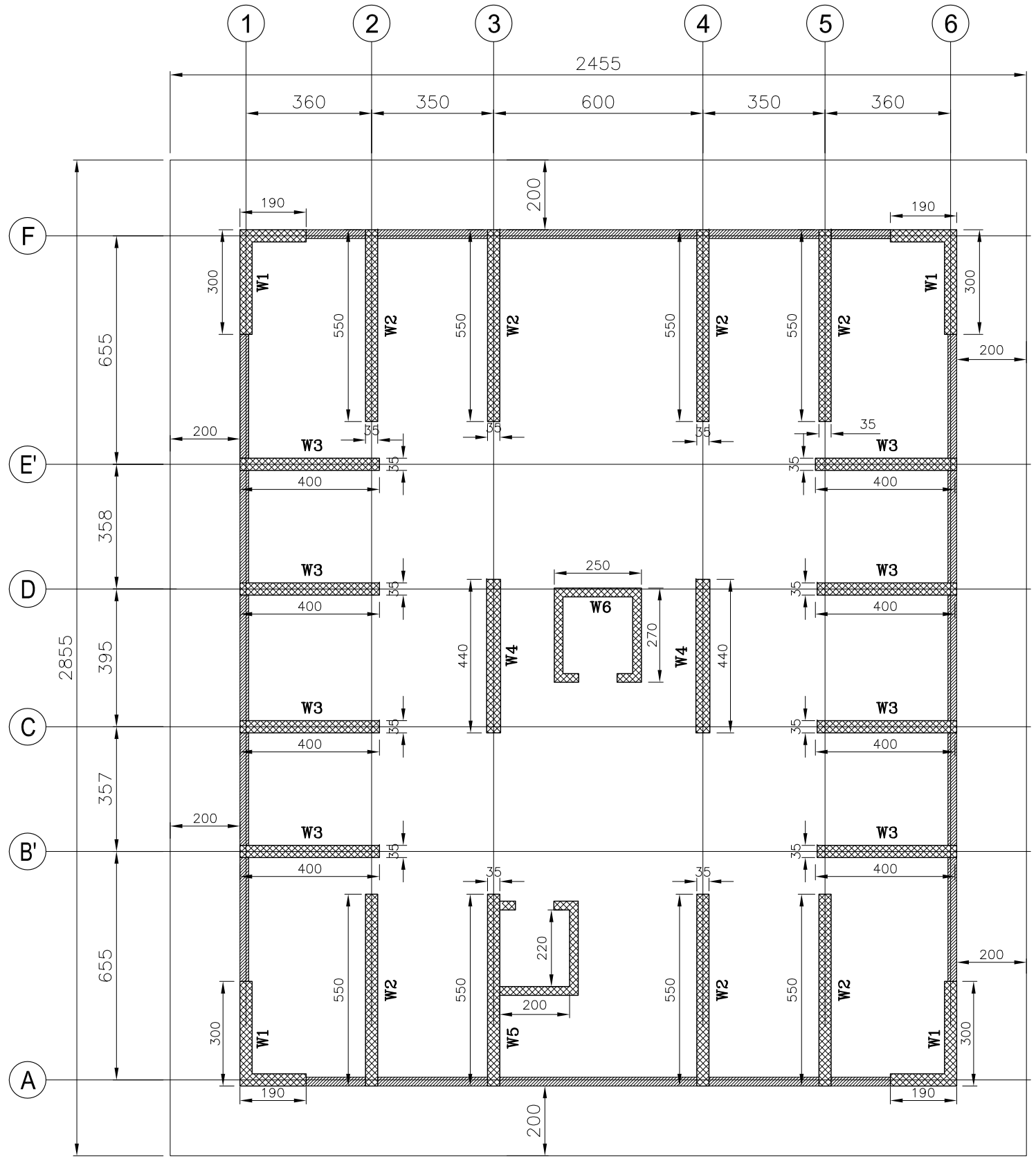

NOTES:

1. CONCRETE STRENGTH (Fc')=5000psi(350kg/cm2)
2. REBAR STRENGTH (Fy)=60000psi(4800kg/cm2)

2 FOUNDATION FORMWORK PLAN

SCALE: 1:150

DRAWING BY:	ABDUL WADOUD		GULISTAN RESIDENTIAL BLOCKS G7(16+1 STORIES PART)	PILING PLAN STRUCTURAL DRAWINGS	SHEET NO: S-03
DESIGN BY:	KANISHKA KABIR				
CHECKED BY:	ENG ZAHER				

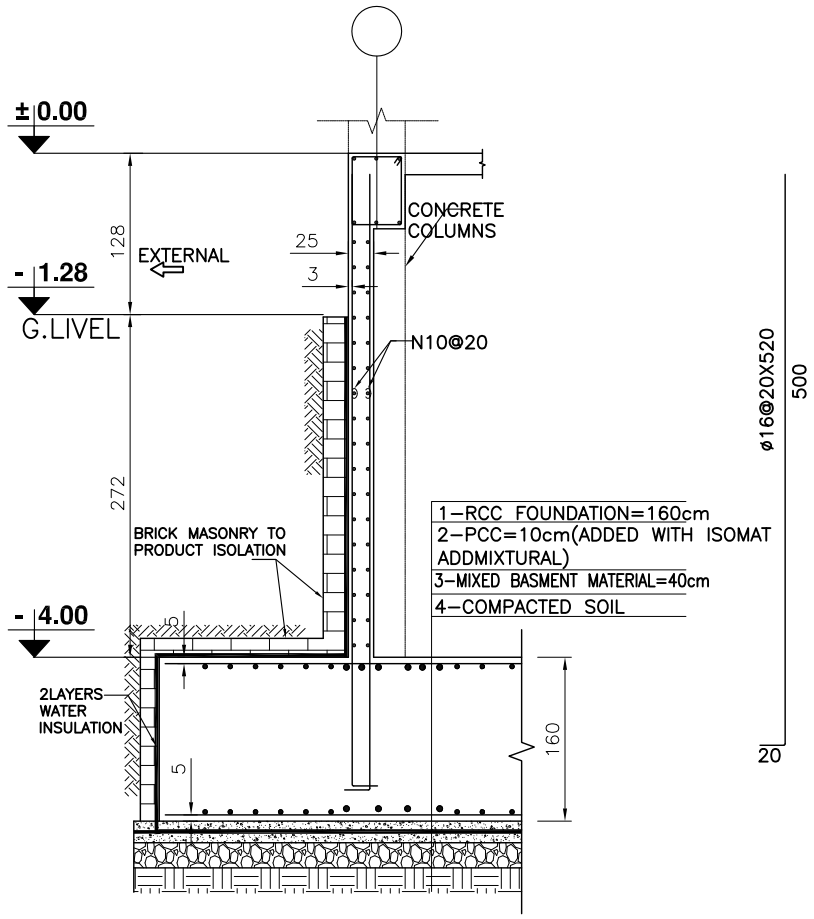

A SECTION A-A(NO WINDOW)
SCALE: 1:50

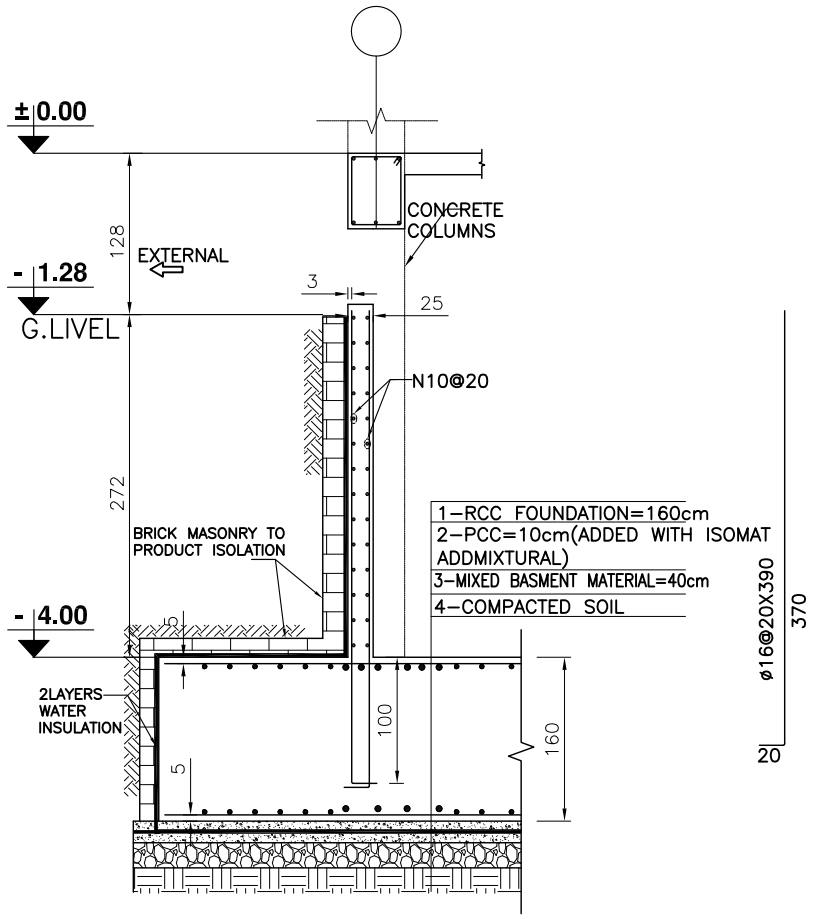

A SECTION A-A(NO WINDOW)
SCALE: 1:50

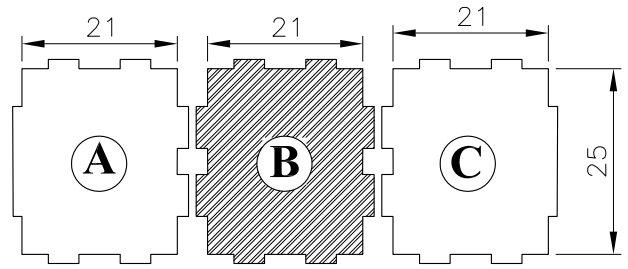

Key Plan

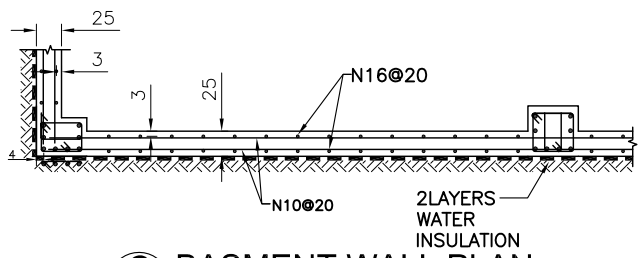

C BASMENT WALL PLAN
SCALE: 1:50

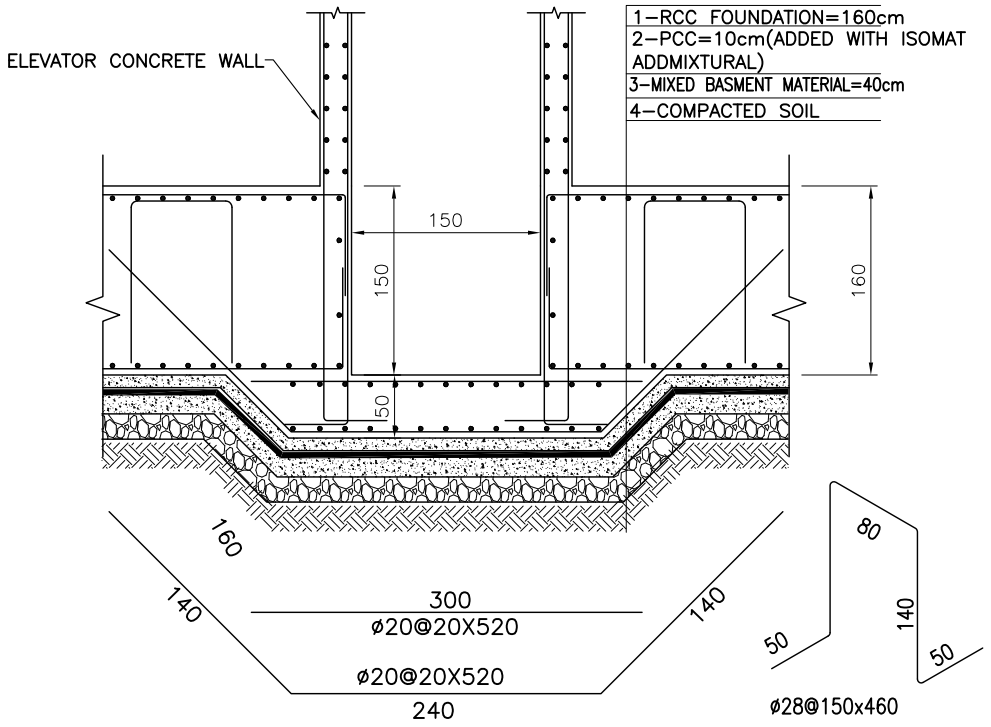

3 CONCRETE WELL FOR ELEVATOR
SCALE: 1:50

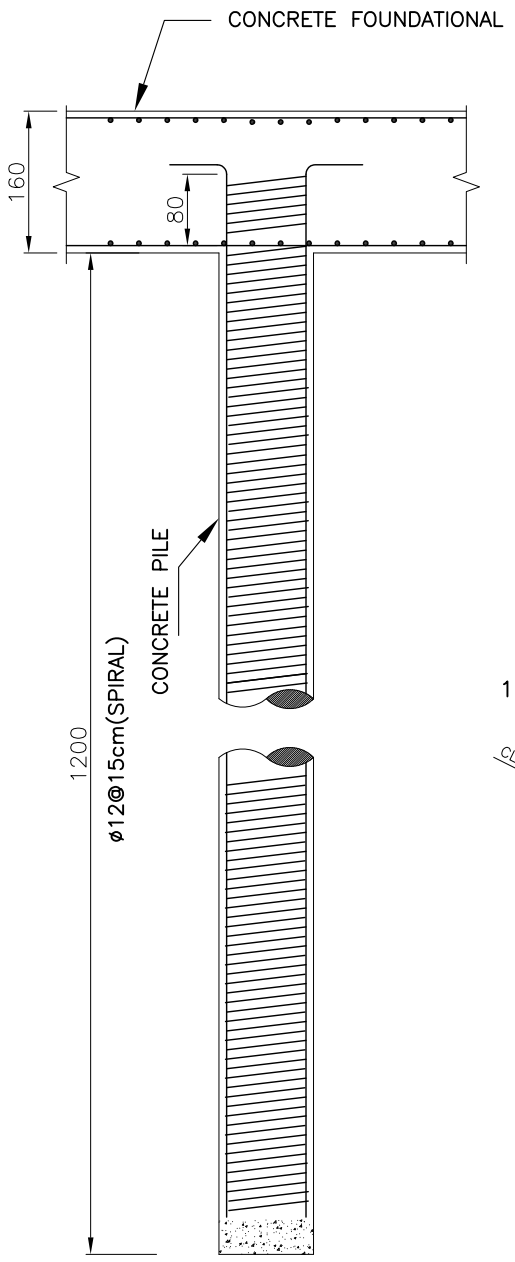

1 TYPICAL PILE(P1) ELEV.
SCALE: 1:75

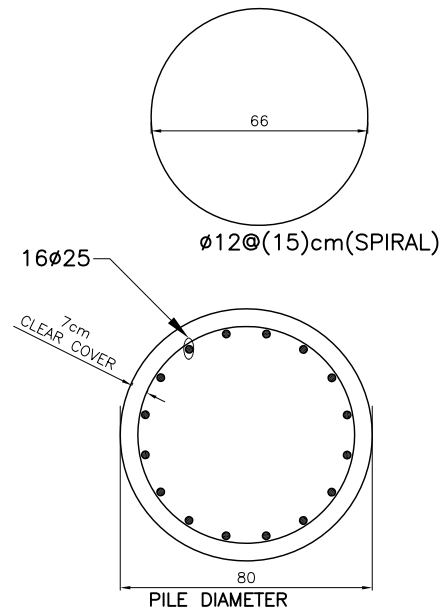

2 PILE SECTION
SCALE: 1:25

NOTES:

1. CONCRETE STRENGTH (Fc')=5000psi(350kg/cm2)
2. REBAR STRENGTH (Fy)=60000psi(4800kg/cm2)

DRAWING BY:	ABDUL WADOUD		GULISTAN RESIDENTIAL BLOCKS G7(16+1 STORIES PART)	PILE SECTION & DETAILS STRUCTURAL DRAWINGS	SHEET NO: S-04
DESIGN BY:	KANISHKA KABIR				
CHECKED BY:	ENG ZAHER				

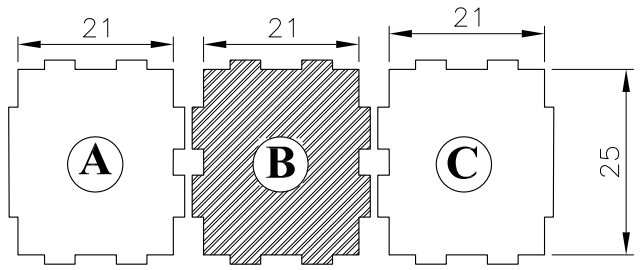

Key Plan

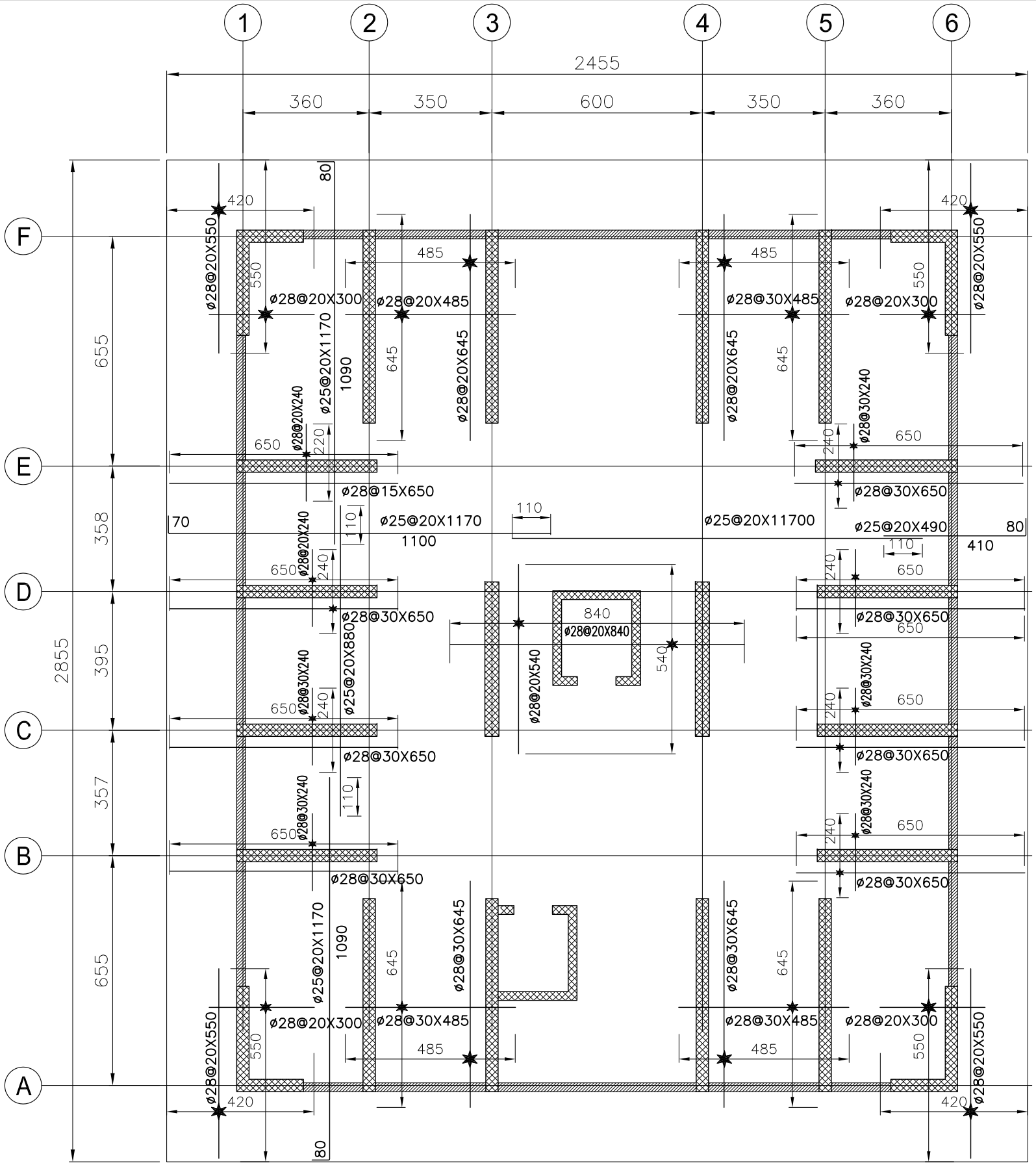

NOTES:

1. CONCRETE STRENGTH (Fc')=5000psi(350kg/cm2)
2. REBAR STRENGTH (Fy)=60000psi(4800kg/cm2)

3 FOUNDATION BOTTAM REINFORCMENT PLAN

SCALE: 1:150

DRAWING BY:	ABDUL WADOUD		GULISTAN RESIDENTIAL BLOCKS G7(16+1 STORIES PART)	FOUNDATION BOTTOM REINFORCMENT PLAN STRUCTURAL DRAWINGS	SHEET NO: S-05
DESIGN BY:	KANISHKA KABIR				
CHECKED BY:	ENG ZAHER				

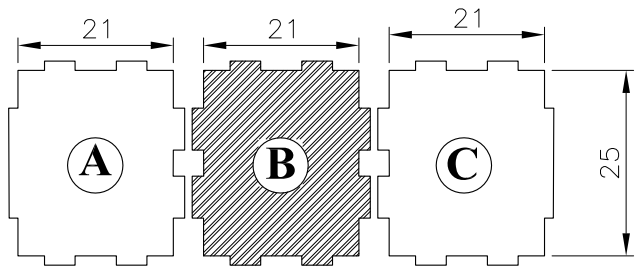

Key Plan

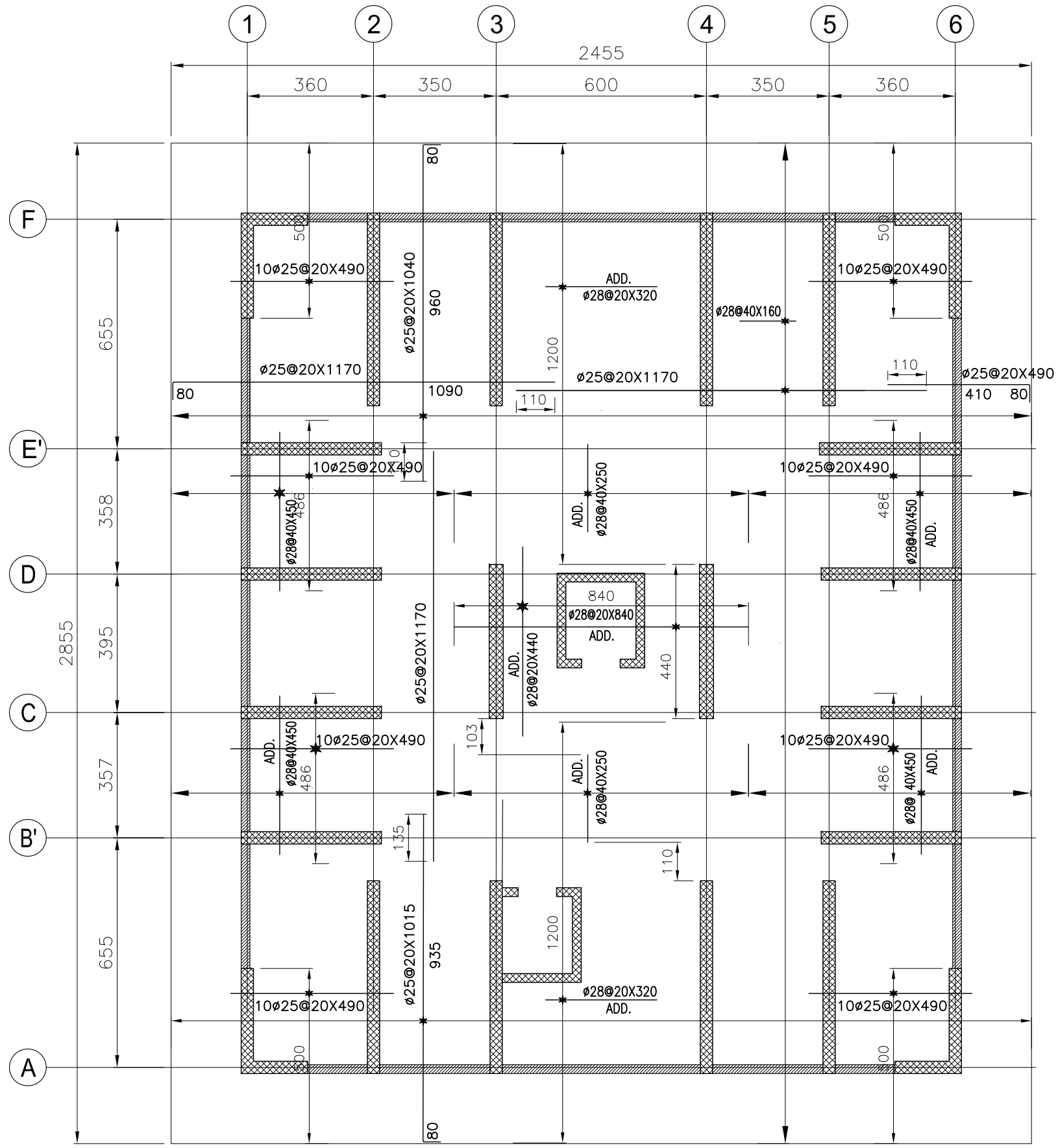

NOTES:

1. CONCRETE STRENGTH (Fc')=5000psi(350kg/cm2)
2. REBAR STRENGTH (Fy)=60000psi(4800kg/cm2)

4 FOUNDATION TOP REINFORCMENTE PLAN

SCALE: 1:150

DRAWING BY:	ABDUL WADOUD		GULISTAN RESIDENTIAL BLOCKS G7(16+1 STORIES PART)	FOUNDATION TOP REINFORCMENTE PLAN STRUCTURAL DRAWINGS	SHEET NO: S-06
DESIGN BY:	KANISHKA KABIR				
CHECKED BY:	ENG ZAHER				

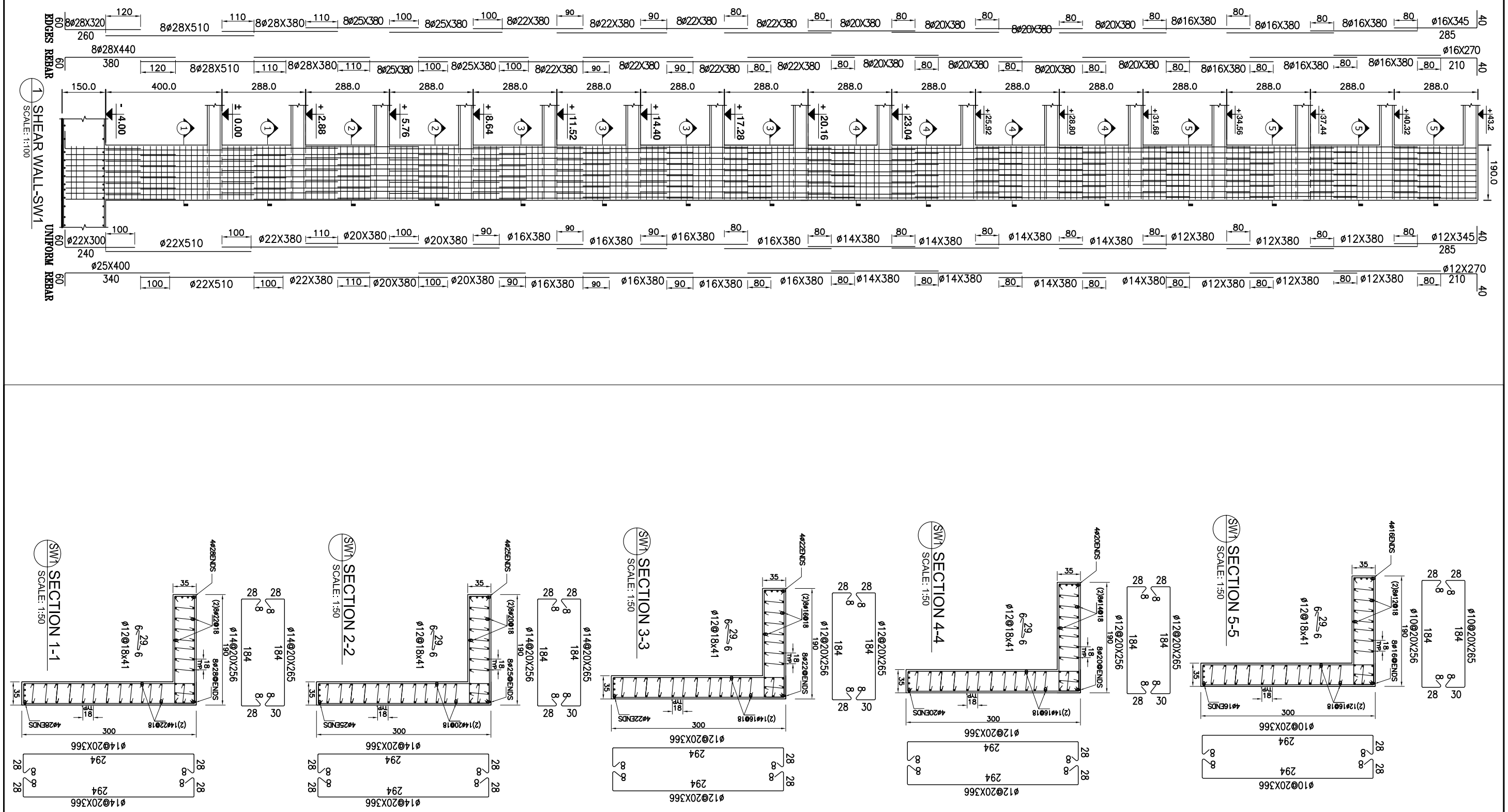

DRAWING BY:	ABDUL WADOUD		GULISTAN RESIDENTIAL BLOCKS G7(10+1 STORIES PART)	SHEAR WALL REINFORCEMENT(SW1) STRUCTURAL DRAWINGS	SHEET NO: S-07
DESIGN BY:	KANISHKA KABIR				
CHECKED BY:	ENG ZAHER				

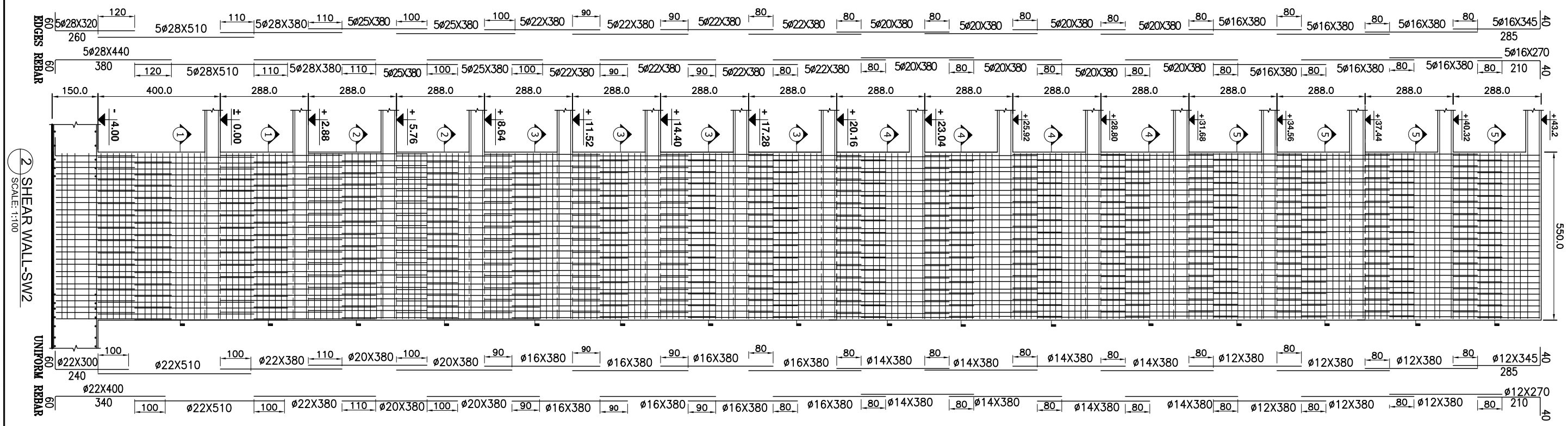

2 SHEAR WALL-SW2
SCALE: 1:100

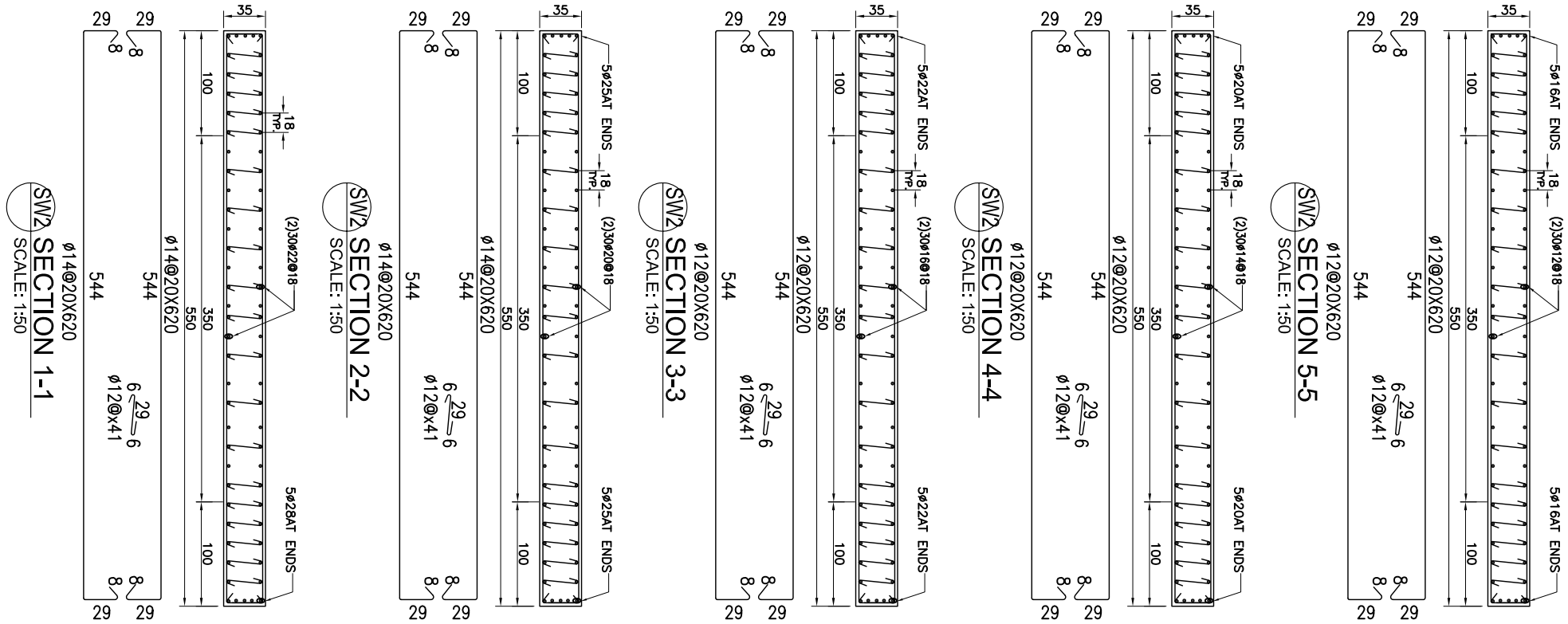

DRAWING BY:	ABDUL WADOUD	GULISTAN RESIDENTIAL BLOCKS G7(10+1 STORIES PART)	SHEAR WALL REINFORCEMENT(SW2) STRUCTURAL DRAWINGS	SHEET NO:	S-08
DESIGN BY:	KANISHKA KABIR				
CHECKED BY:	ENG ZAHER				

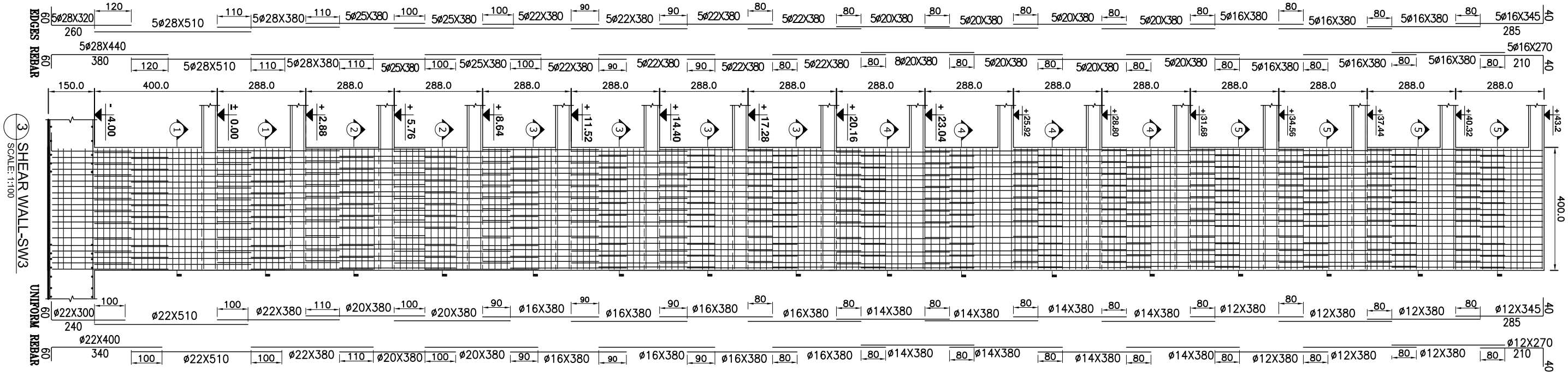

3 SHEAR WALL-SW3
SCALE: 1:100

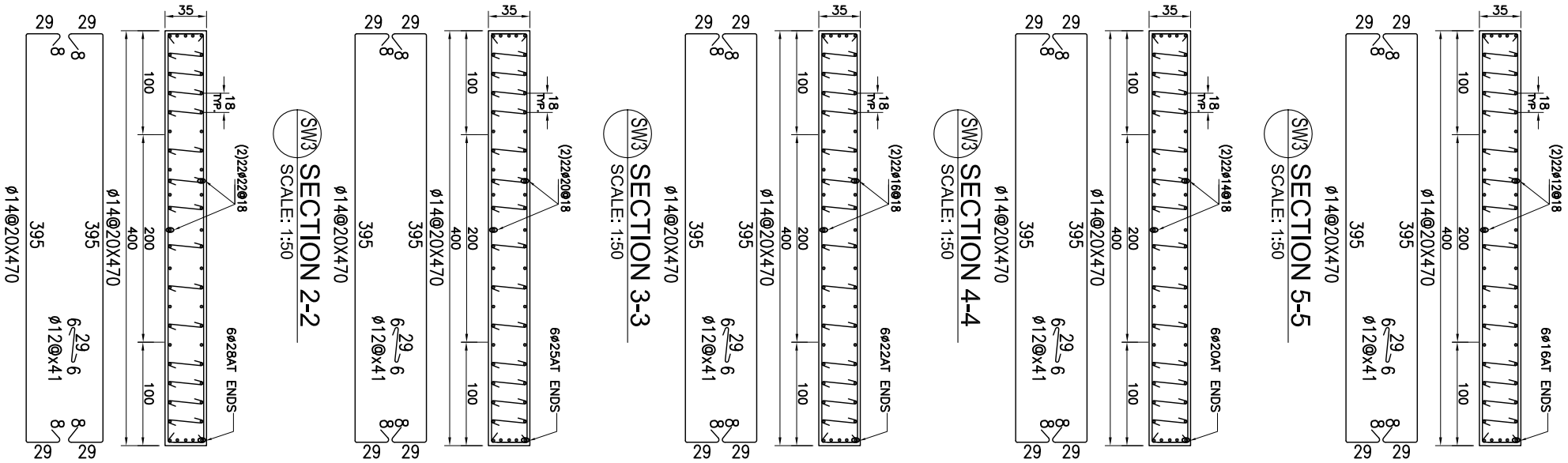

SW3 SECTION 5-5
SCALE: 1:50

SW3 SECTION 4-4
SCALE: 1:50

SW3 SECTION 3-3
SCALE: 1:50

SW3 SECTION 2-2
SCALE: 1:50

SW3 SECTION 1-1
SCALE: 1:50

DRAWING BY:	ABDUL WADOUD	GULISTAN RESIDENTIAL BLOCKS G7(10+1 STORIES PART)	SHEAR WALL REINFORCEMENT(SW3) STRUCTURAL DRAWINGS	SHEET NO:	S-09
DESIGN BY:	KANISHKA KABIR				
CHECKED BY:	ENG ZAHER				

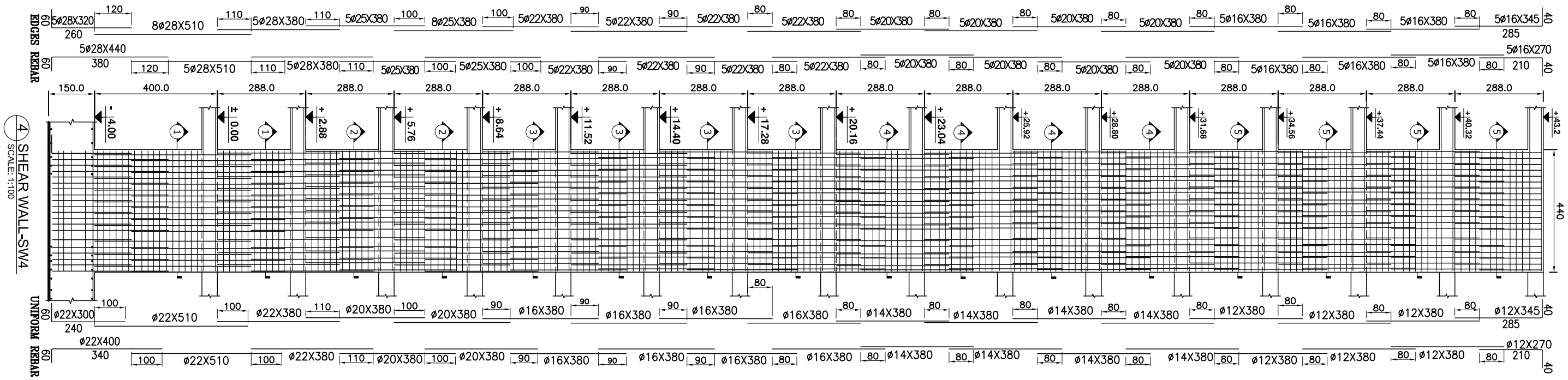

4 SHEAR WALL-SW4
SCALE: 1:100

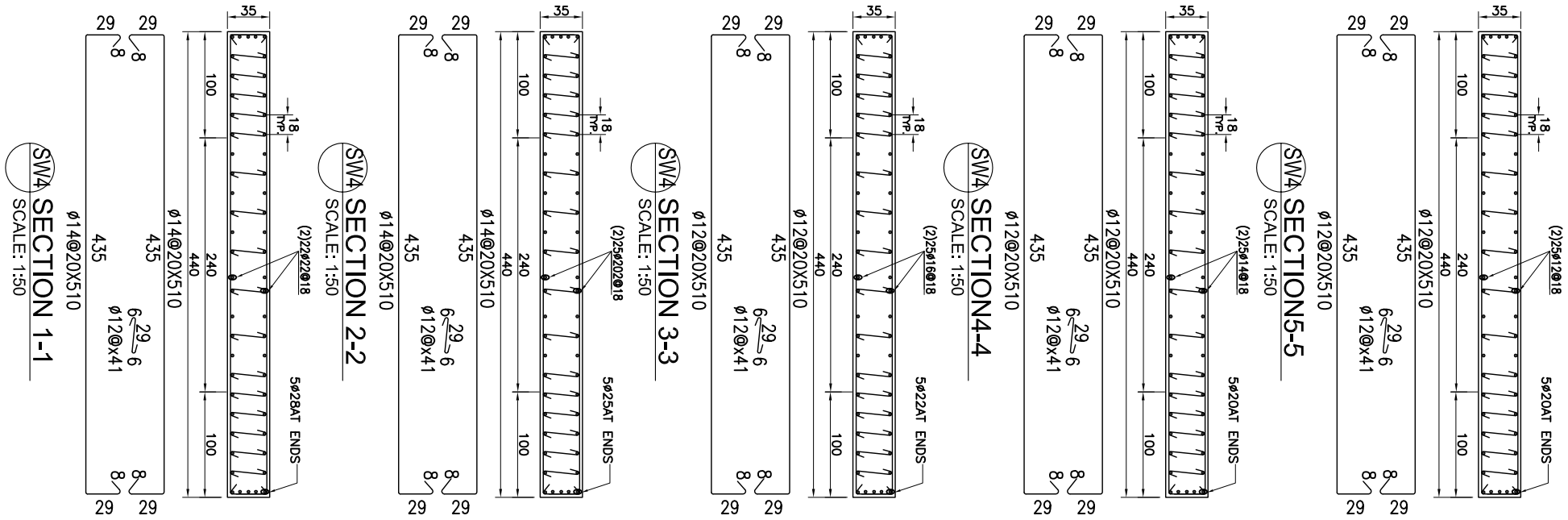

SW4 SECTION5-5
SCALE: 1:50

SW4 SECTION4-4
SCALE: 1:50

SW4 SECTION 3-3
SCALE: 1:50

SW4 SECTION 2-2
SCALE: 1:50

SW4 SECTION 1-1
SCALE: 1:50

DRAWING BY:	ABDUL WADOUD		GULISTAN RESIDENTIAL BLOCKS G7(10+1 STORIES PART)	SHEAR WALL REINFORCEMENT(SW4) STRUCTURAL DRAWINGS	SHEET NO: S-10
DESIGN BY:	KANISHKA KABIR				
CHECKED BY:	ENG ZAHER				

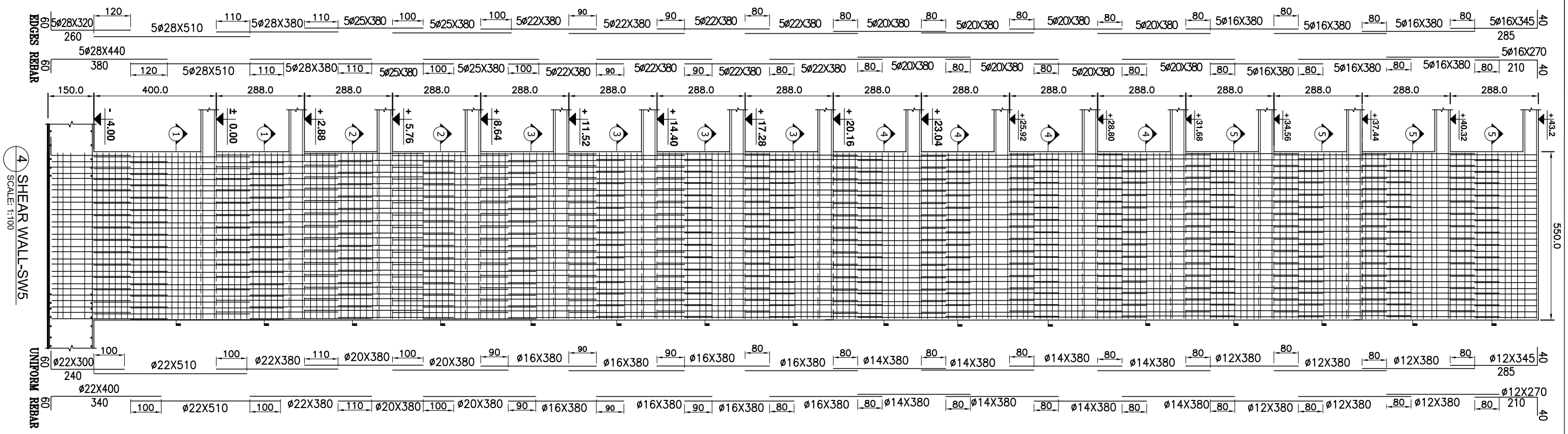

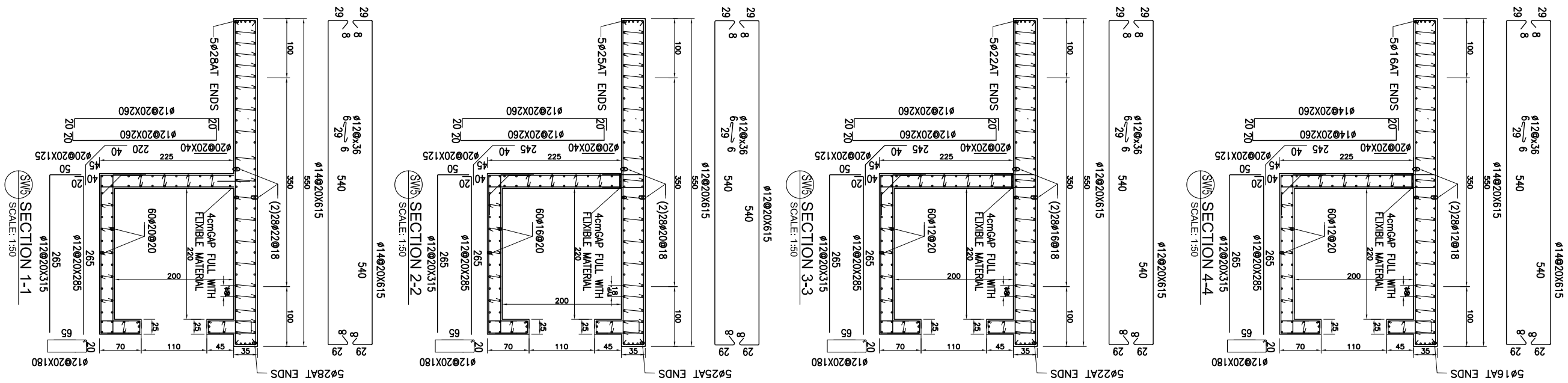

DRAWING BY:	ABDUL WADOUD		GULISTAN RESIDENTIAL BLOCKS G7(10+1 STORIES PART)	SHEAR WALL REINFORCEMENT(SW5) STRUCTURAL DRAWINGS	SHEET NO: S-11
DESIGN BY:	KANISHKA KABIR				
CHECKED BY:	ENG ZAHER				

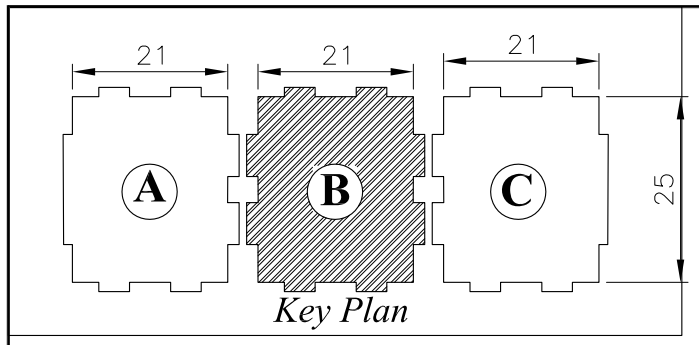

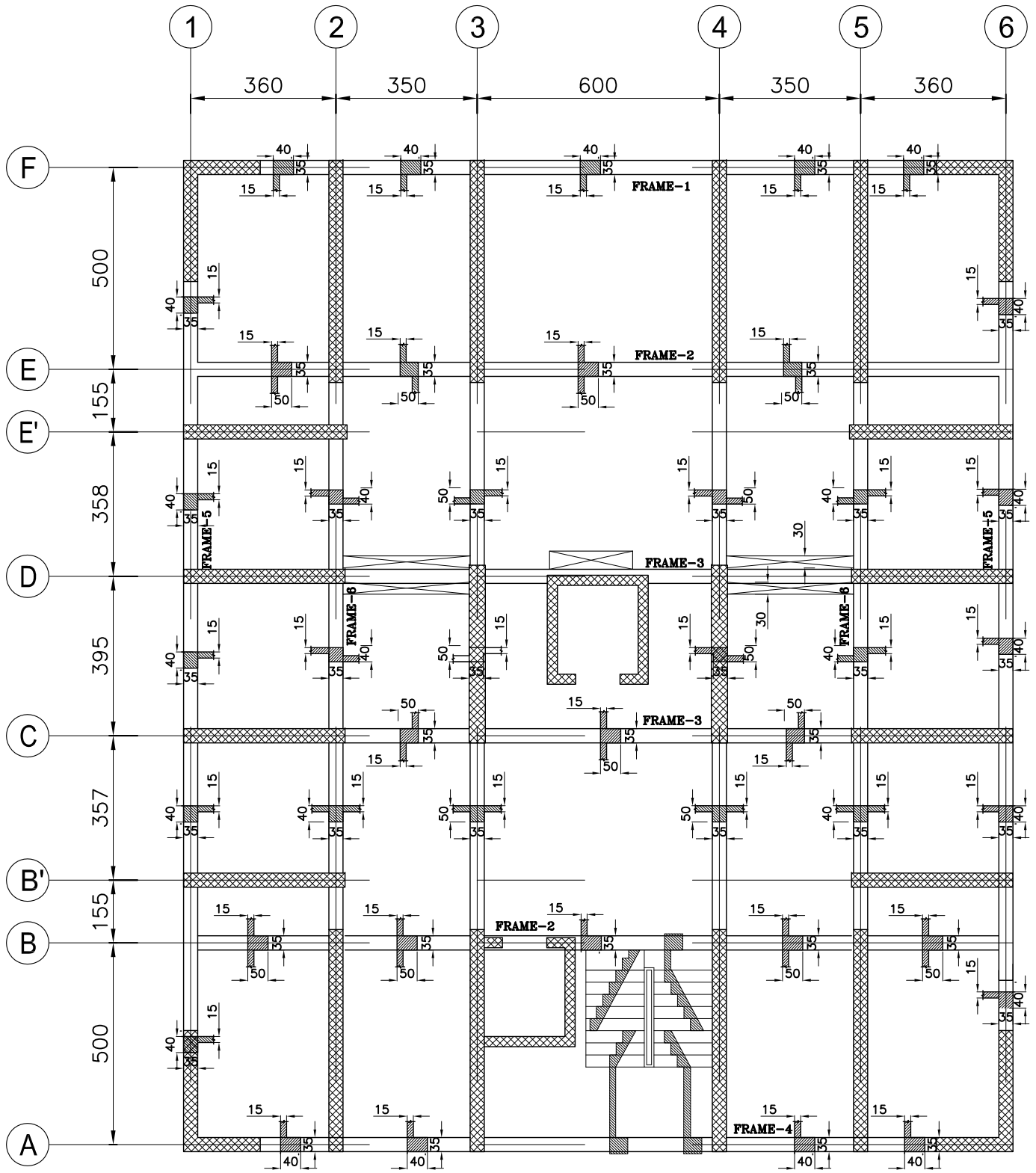

NOTES:

1. CONCRETE STRENGTH (Fc')=5000psi(350kg/cm2)
2. REBAR STRENGTH (Fy)=60000psi(4800kg/cm2)

1 FIRST FLOOR FORMWORK PLAN (± 0.00)
SCALE: 1:100

DRAWING BY:	ABDUL WADOUD		GULISTAN RESIDENTIAL BLOCKS G7(16+1 STORIES PART)	FIRST FLOOR FORMWORK PLAN (± 0.00) STRUCTURAL DRAWINGS	SHEET NO:	S-12
DESIGN BY:	KANISHKA KABIR					
CHECKED BY:	ENG ZAHER					

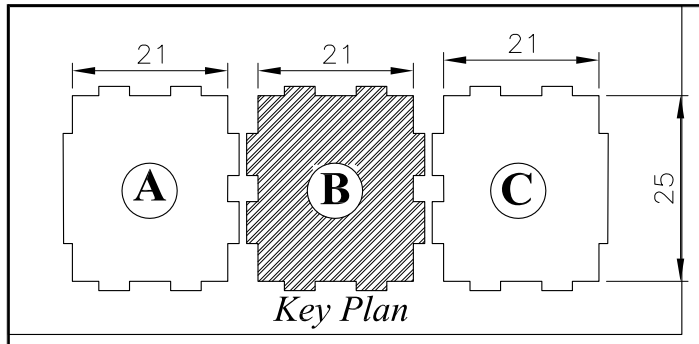

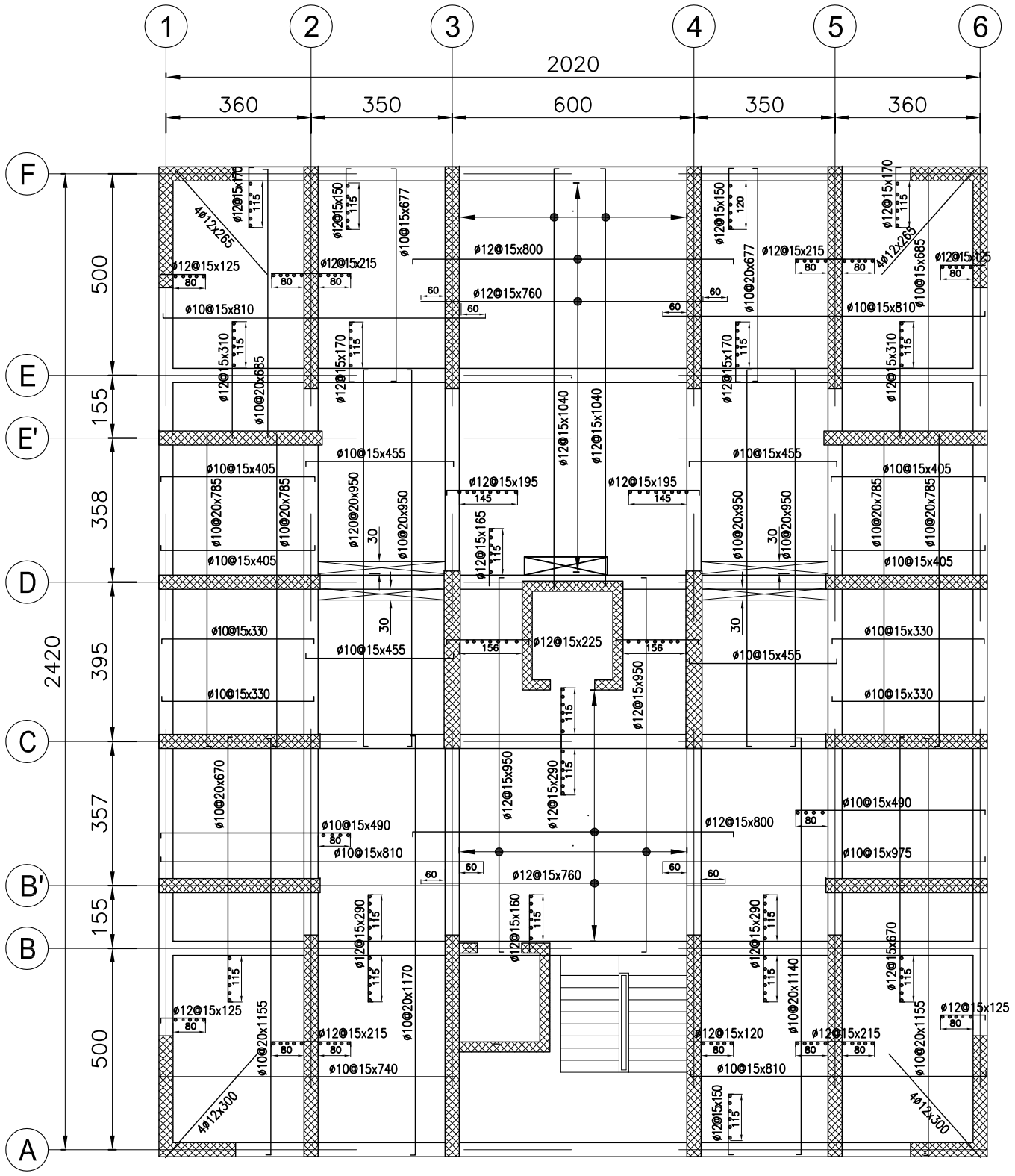

NOTES:

1. CONCRETE STRENGTH (Fc')=5000psi(350kg/cm2)
2. REBAR STRENGTH (Fy)=60000psi(4800kg/cm2)
3. USE ø10@20cm AT THE TOP OF SLABS WHERE IS NOT SHOWN REBAR.

T TYPICAL FLOOR REINFORCMENT PLAN (+ 2.88--43.2)
SCALE: 1:100

DRAWING BY:	ABDUL WADOUD		GULISTAN RESIDENTIAL BLOCKS G7(16+1 STORIES PART)	FIRST FLOOR REINFORCMENT PLAN (± 0.00) STRUCTURAL DRAWINGS	SHEET NO: S-13
DESIGN BY:	KANISHKA KABIR				
CHECKED BY:	ENG ZAHER				

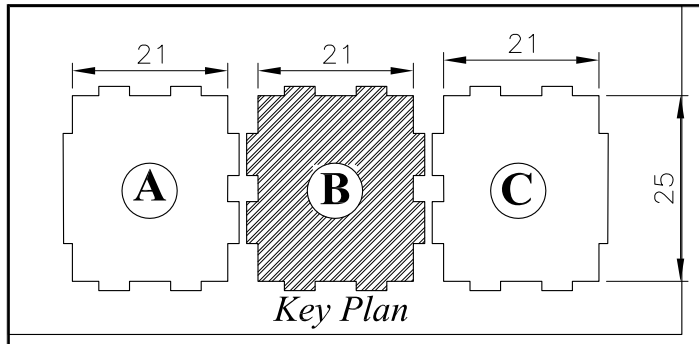

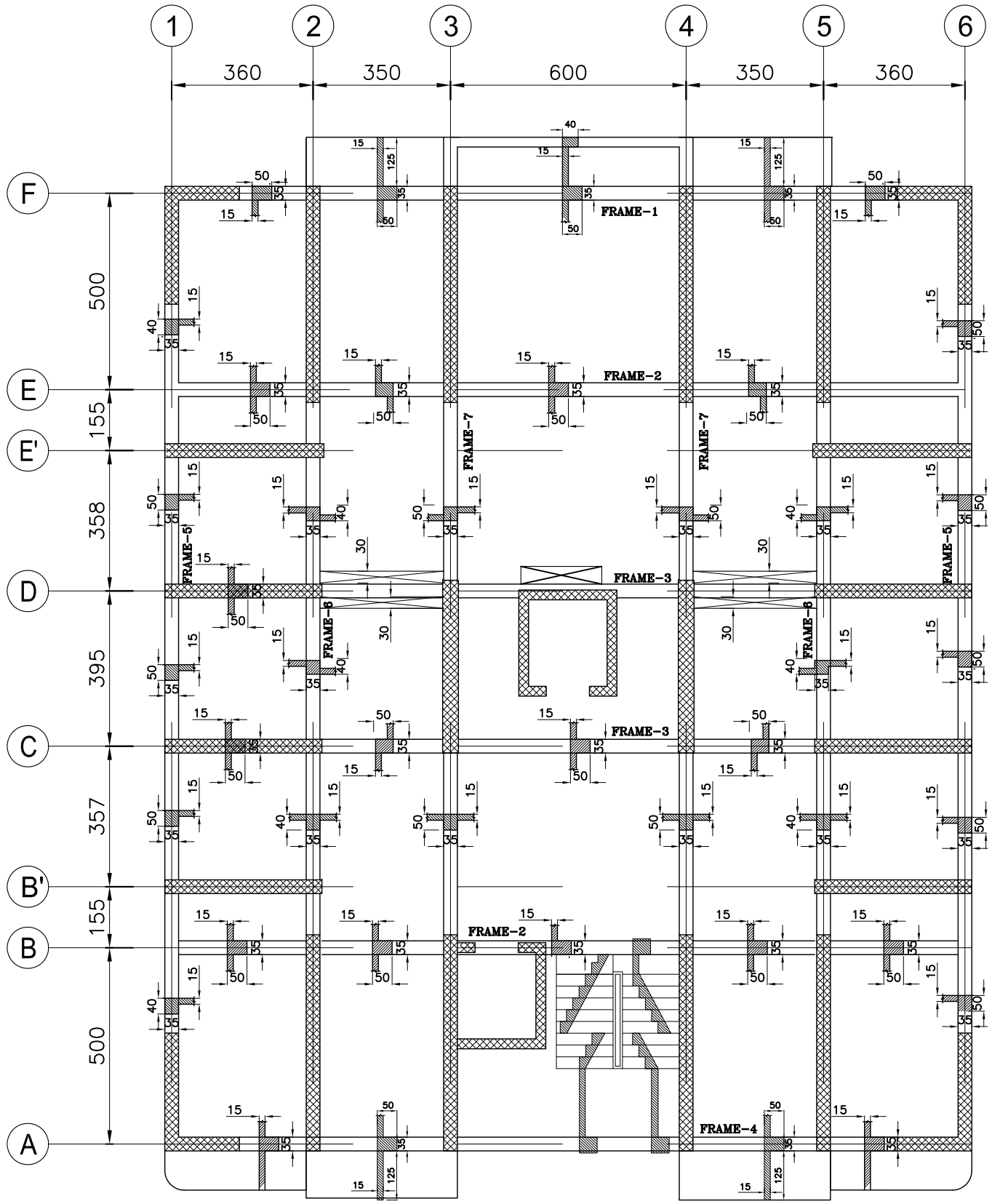

NOTES:

1. CONCRETE STRENGTH (Fc')=5000psi(350kg/cm2)
2. REBAR STRENGTH (Fy)=60000psi(4800kg/cm2)

T TYPICAL FLOOR FORMWORK PLAN (2.88-- 43.2)
SCALE: 1:100

DRAWING BY:	ABDUL WADOUD		GULISTAN RESIDENTIAL BLOCKS G7(16+1 STORIES PART)	TYPICAL FLOOR FORMWORK PLAN (2.88-43.2) STRUCTURAL DRAWINGS	SHEET NO: S-14
DESIGN BY:	KANISHKA KABIR				
CHECKED BY:	ENG ZAHER				

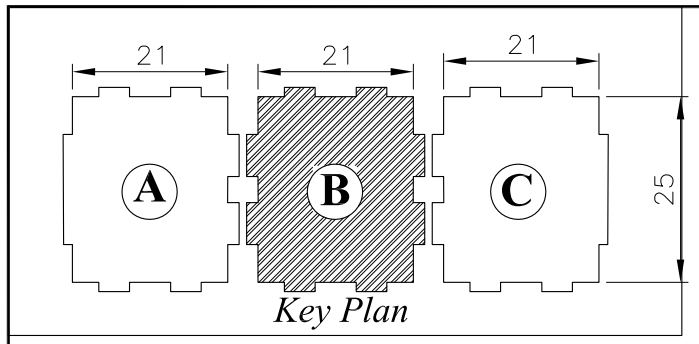

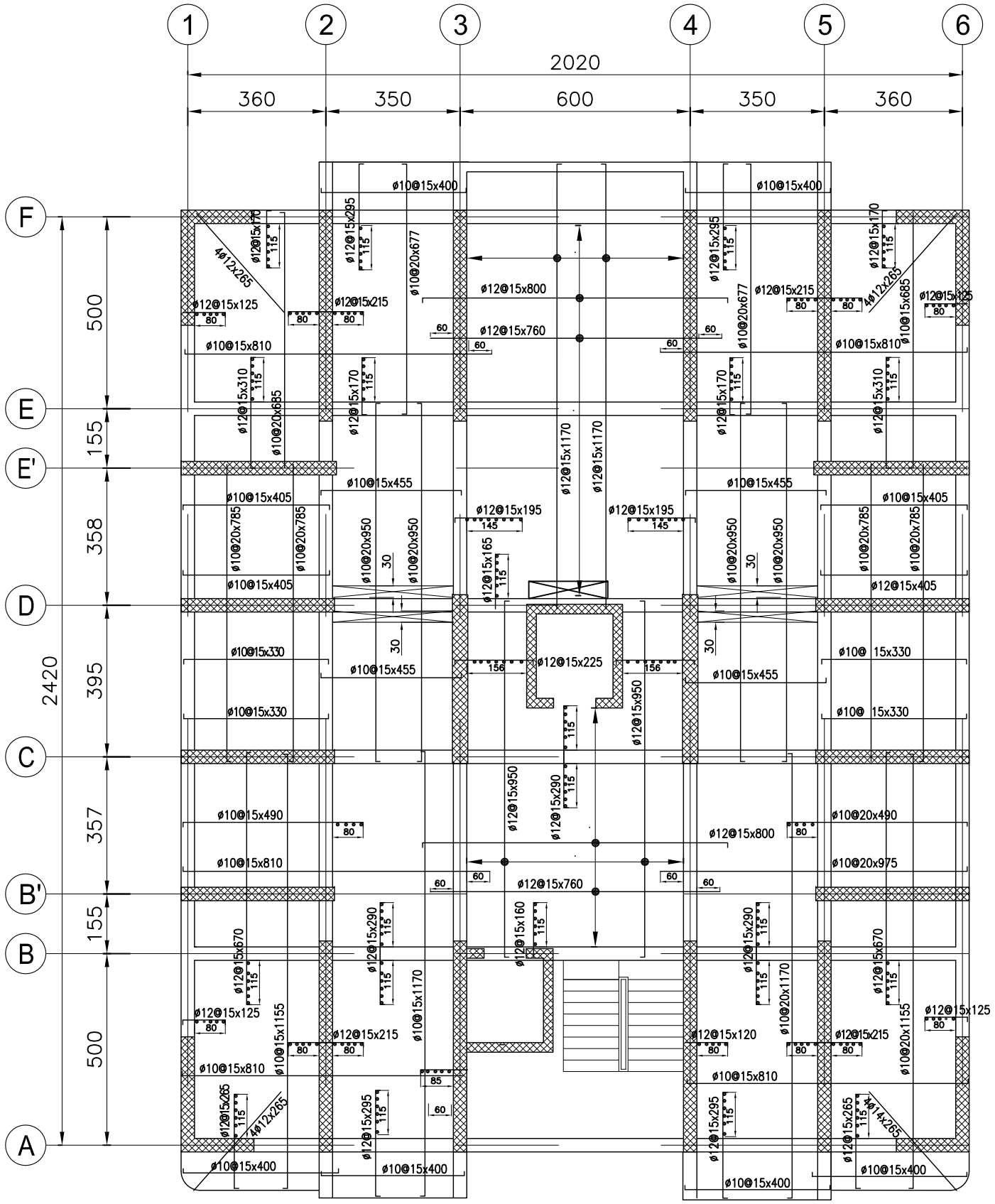

NOTES:

1. CONCRETE STRENGTH (Fc')=5000psi(350kg/cm2)
2. REBAR STRENGTH (Fy)=60000psi(4800kg/cm2)

(T) TYPICAL FLOOR REINFORCMENT PLAN (+ 2.88--43.2)

SCALE: 1:100

DRAWING BY:	ABDUL WADOUD		GULISTAN RESIDENTIAL BLOCKS G7(16+1 STORIES PART)	TYPICAL FLOOR REINFORCMENT PLAN (+2.88 TO+43.2) STRUCTURAL DRAWINGS	SHEET NO: S-15
DESIGN BY:	KANISHKA KABIR				
CHECKED BY:	ENG ZAHER				

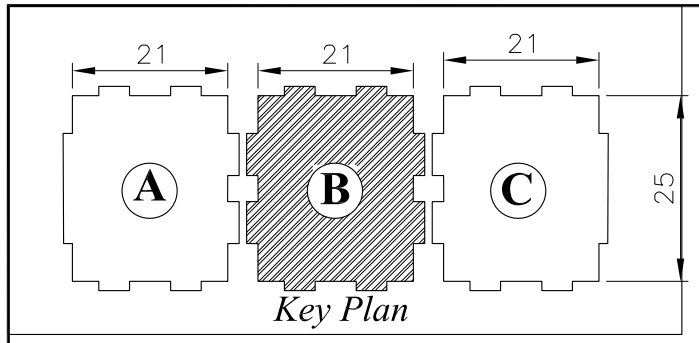

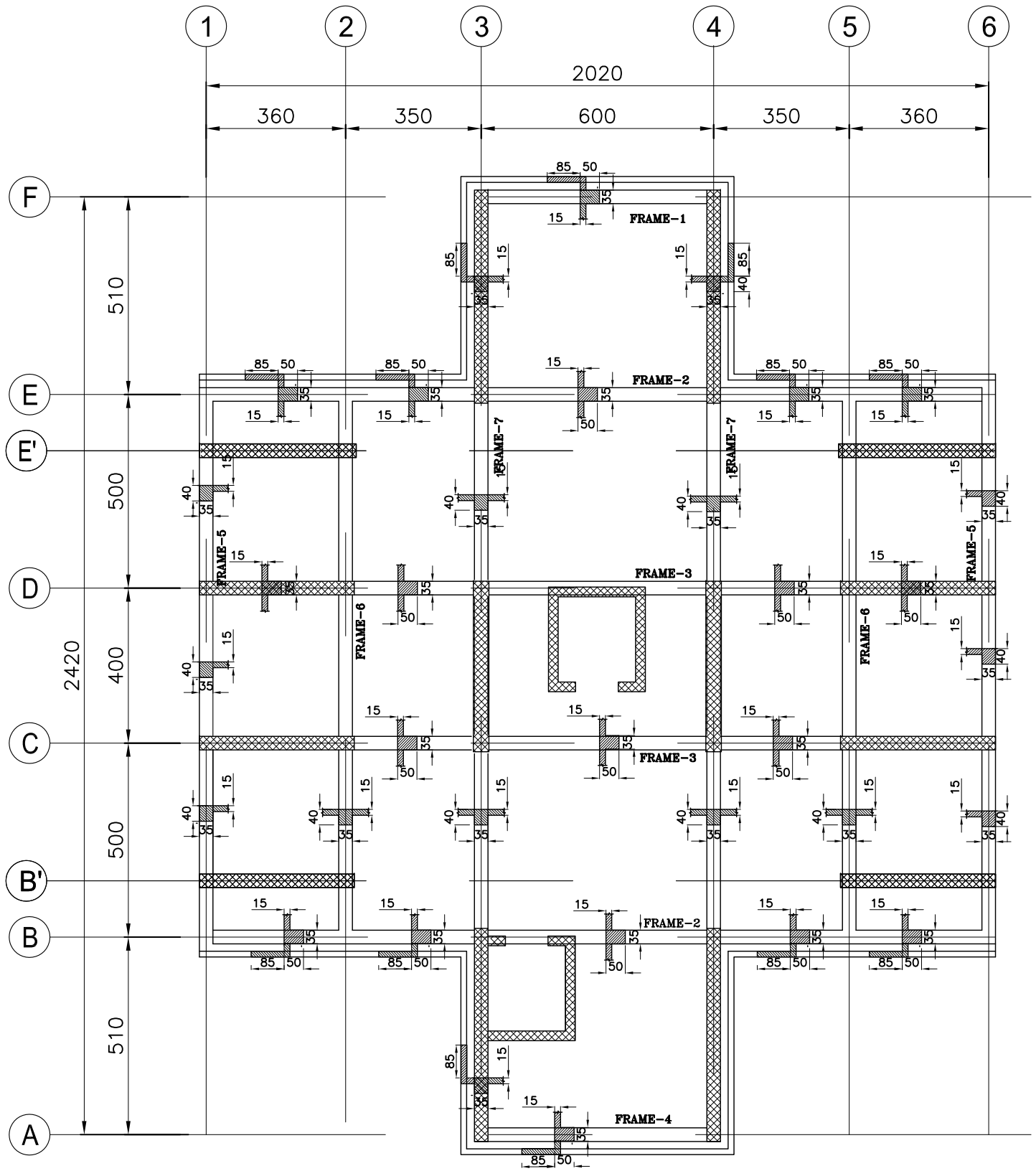

R ROOF FLOOR FORMWORK PLAN (+46.08.)
SCALE: 1:100

NOTES:

1. CONCRETE STRENGTH (Fc')=5000psi(350kg/cm2)
2. REBAR STRENGTH (Fy)=60000psi(4800kg/cm2)

DRAWING BY:	ABDUL WADOUD		GULISTAN RESIDENTIAL BLOCKS G7(16+1 STORIES PART)	ROOF FLOOR FORMWORK PLAN (+46.08) STRUCTURAL DRAWINGS	SHEET NO: S-16
DESIGN BY:	KANISHKA KABIR				
CHECKED BY:	ENG ZAHER				

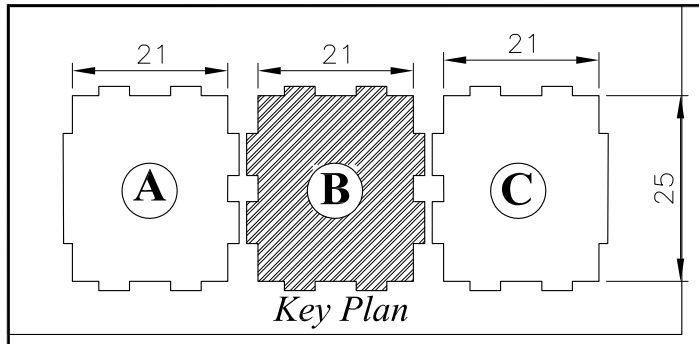

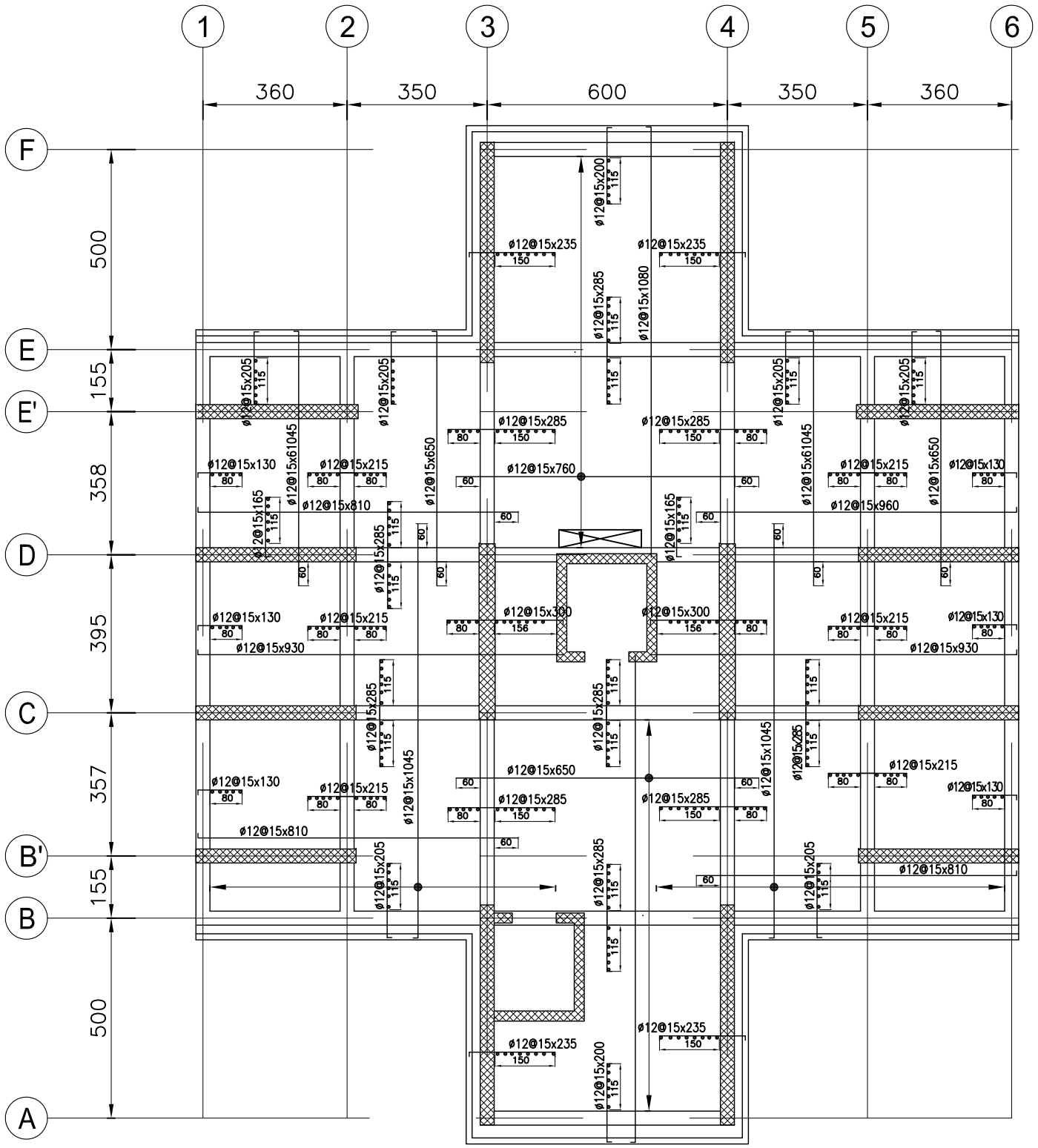

NOTES:

1. CONCRETE STRENGTH (Fc')=5000psi(350kg/cm2)
2. REBAR STRENGTH (Fy)=60000psi(4800kg/cm2)

R ROOF FLOOR REINFORCEMENT (+46.08)
SCALE: 1:100

DRAWING BY:	ABDUL WADOUD		GULISTAN RESIDENTIAL BLOCKS G7(16+1 STORIES PART)	ROOF FLOOR REINFORCEMENT (+46.08) STRUCTURAL DRAWINGS	SHEET NO: S-17
DESIGN BY:	KANISHKA KABIR				
CHECKED BY:	ENG ZAHER				

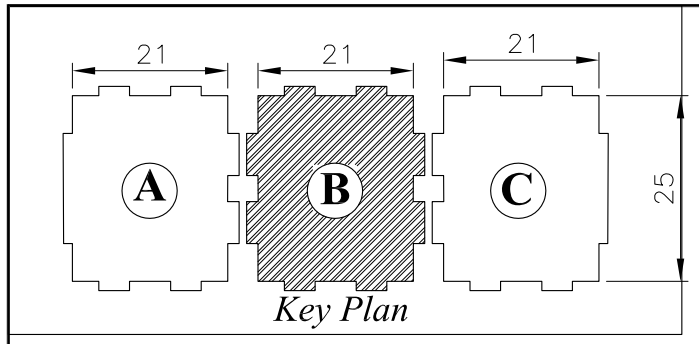

Key Plan

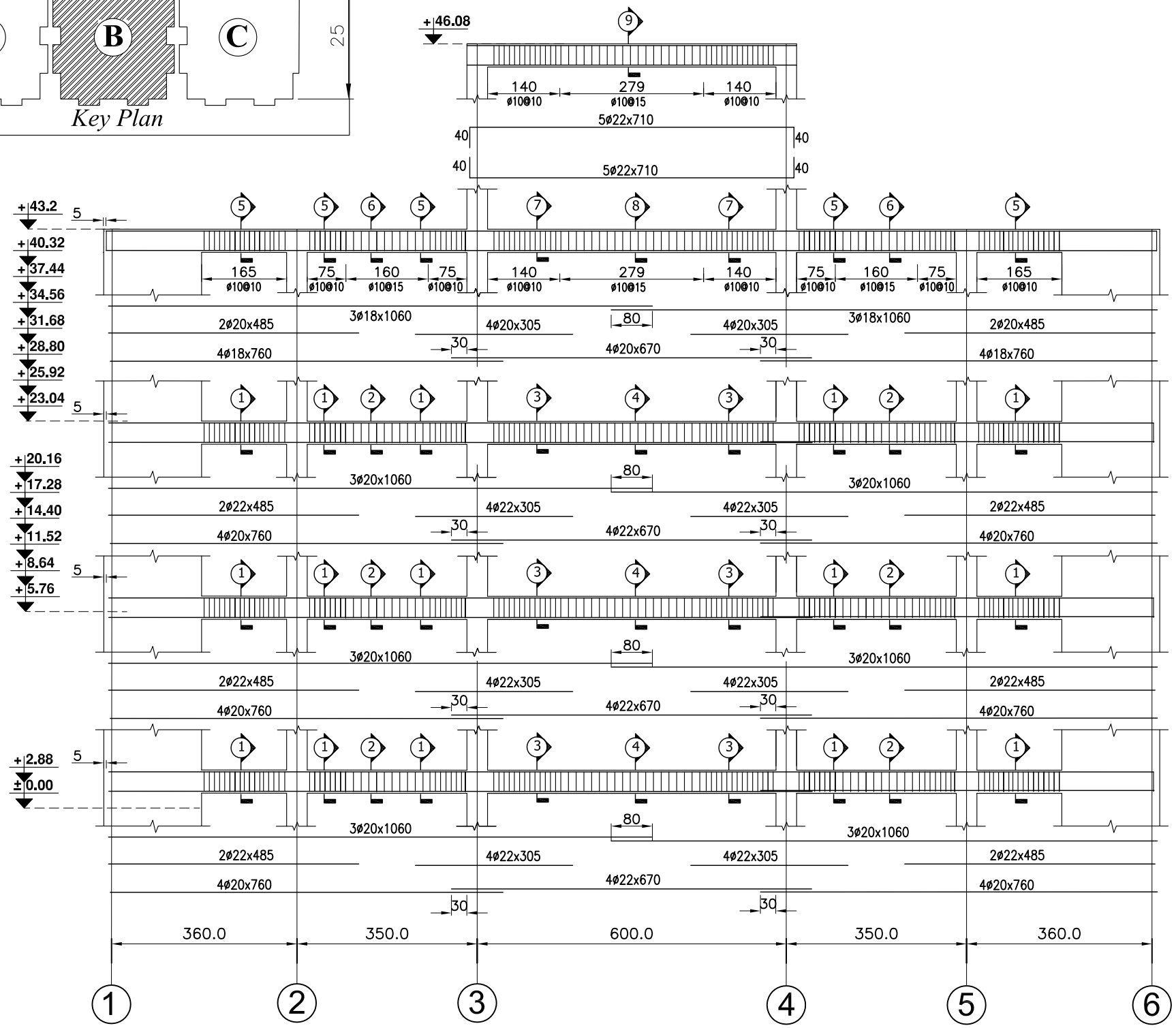

1 FRAME-1 (LONGITUDNAL REINFORCMENT)
SCALE: 1:120

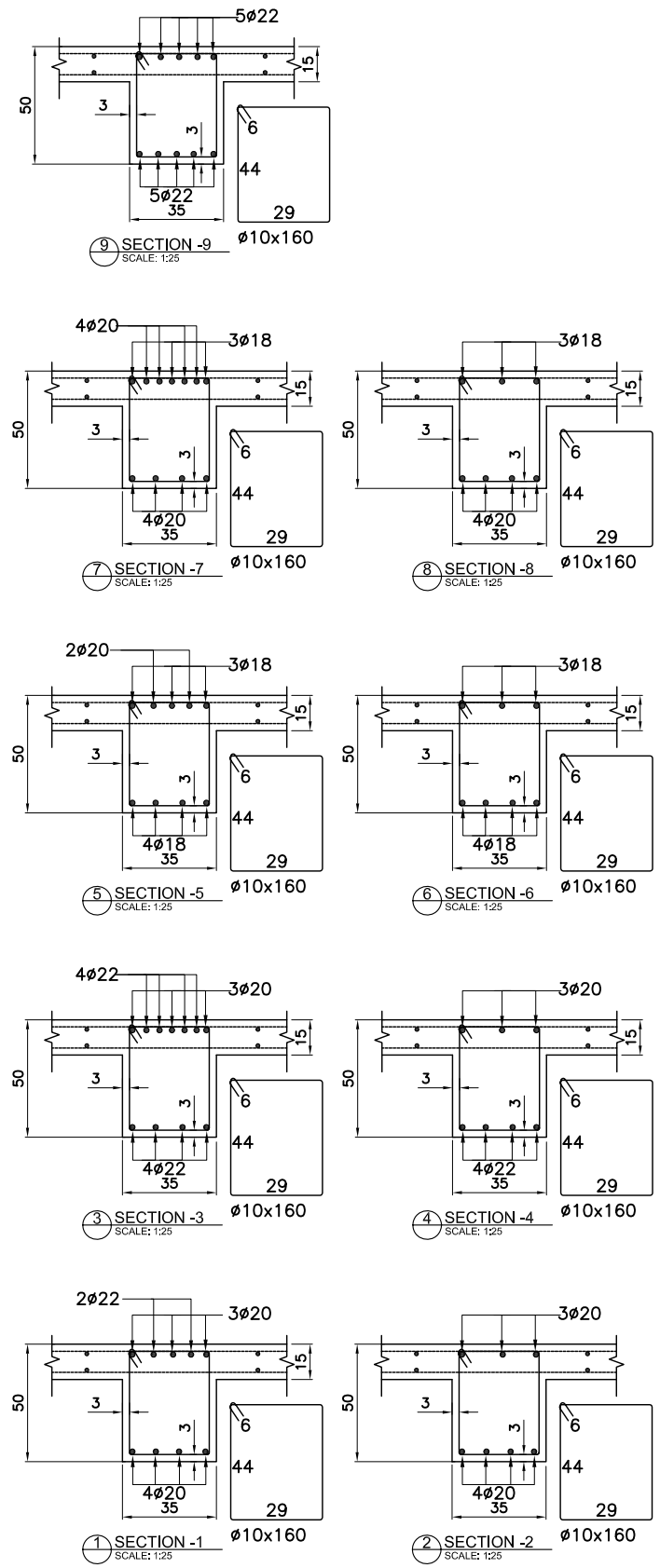

9 SECTION -9 SCALE: 1:25
7 SECTION -7 SCALE: 1:25
8 SECTION -8 SCALE: 1:25
5 SECTION -5 SCALE: 1:25
6 SECTION -6 SCALE: 1:25
3 SECTION -3 SCALE: 1:25
4 SECTION -4 SCALE: 1:25
1 SECTION -1 SCALE: 1:25
2 SECTION -2 SCALE: 1:25

NOTES:

1. CONCRETE STRENGTH (Fc')=5000psi(350kg/cm2)
2. REBAR STRENGTH (Fy)=60000psi(4800kg/cm2)

DRAWING BY:	ABDUL WADOUD		GULISTAN RESIDENTIAL BLOCKS G7(16+1 STORIES PART)	FRAME-1 (LONGITUDNAL REINFORCMENT) STRUCTURAL DRAWINGS	SHEET NO: S-18
DESIGN BY:	KANISHKA KABIR				
CHECKED BY:	ENG ZAHER				

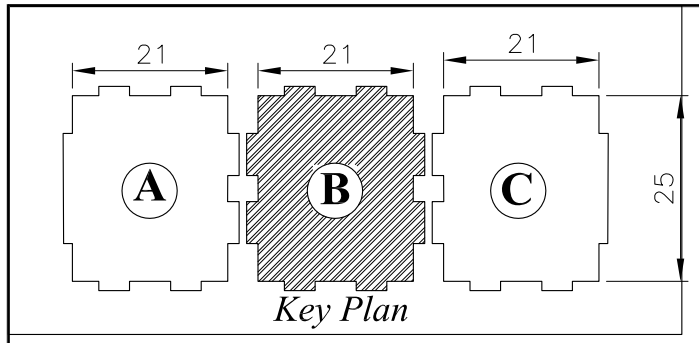

Key Plan

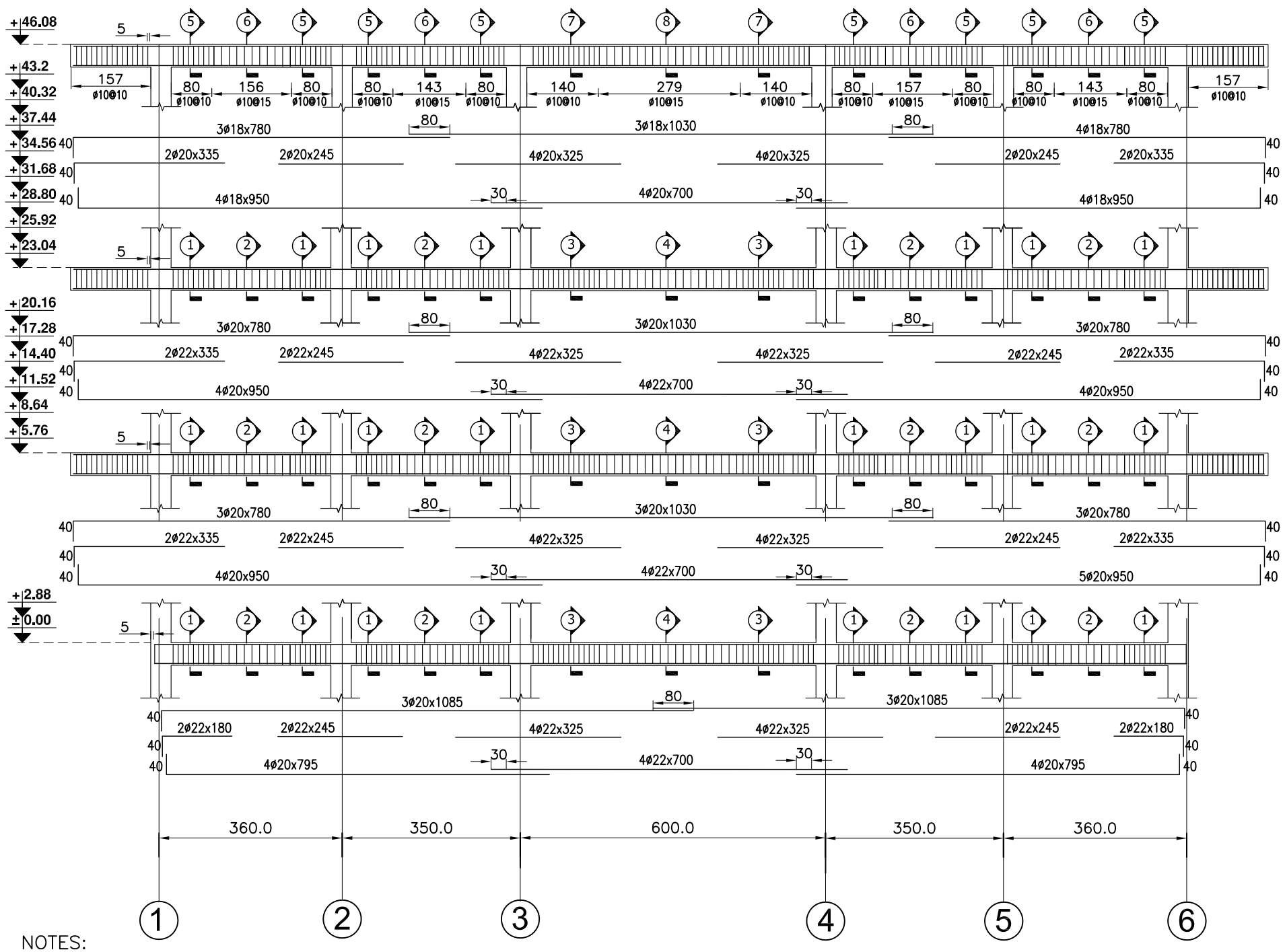

NOTES:

1. CONCRETE STRENGTH (Fc')=5000psi(350kg/cm2)
2. REBAR STRENGTH (Fy)=60000psi(4800kg/cm2)

2 FRAME-2 (LONGITUDNAL REINFORCMENT)
SCALE: 1:120

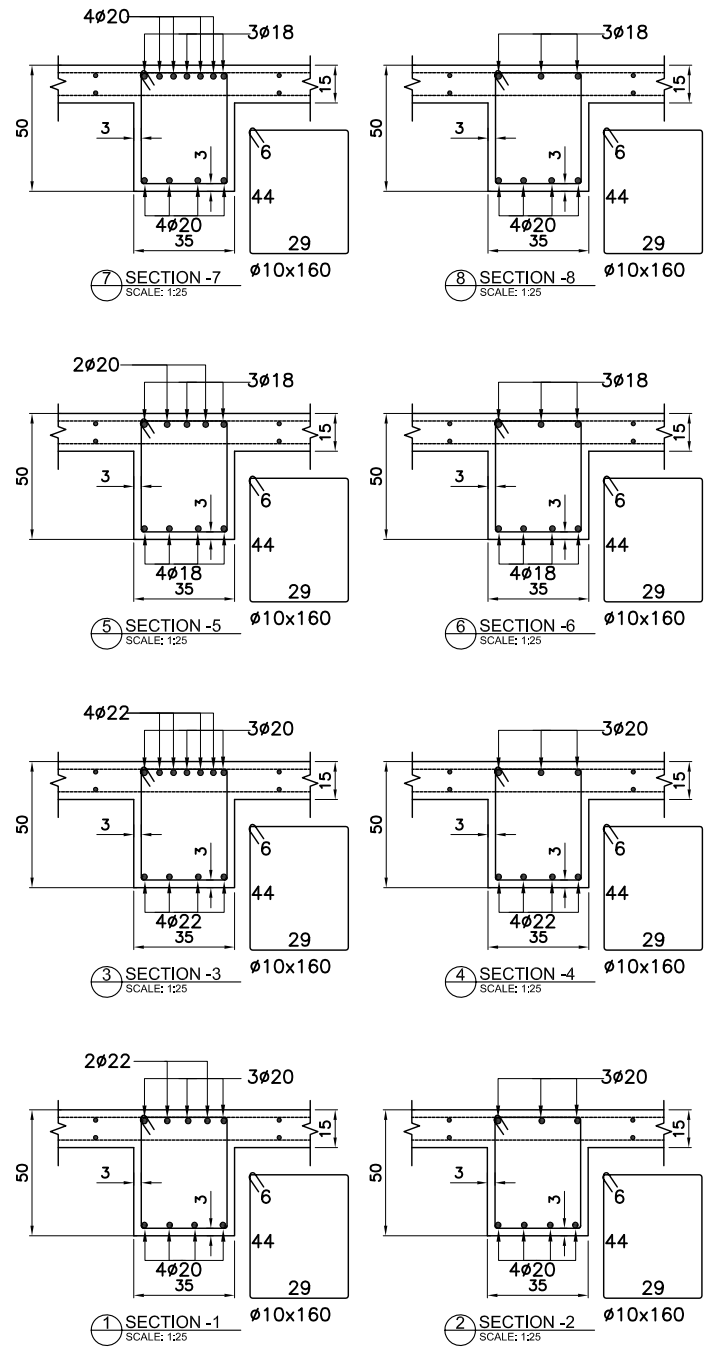

DRAWING BY:	ABDUL WADOUD		GULISTAN RESIDENTIAL BLOCKS G7(16+1 STORIES PART)	FRAME-2 (LONGITUDNAL REINFORCMENT) STRUCTURAL DRAWINGS	SHEET NO: S-19
DESIGN BY:	KANISHKA KABIR				
CHECKED BY:	ENG ZAHER				

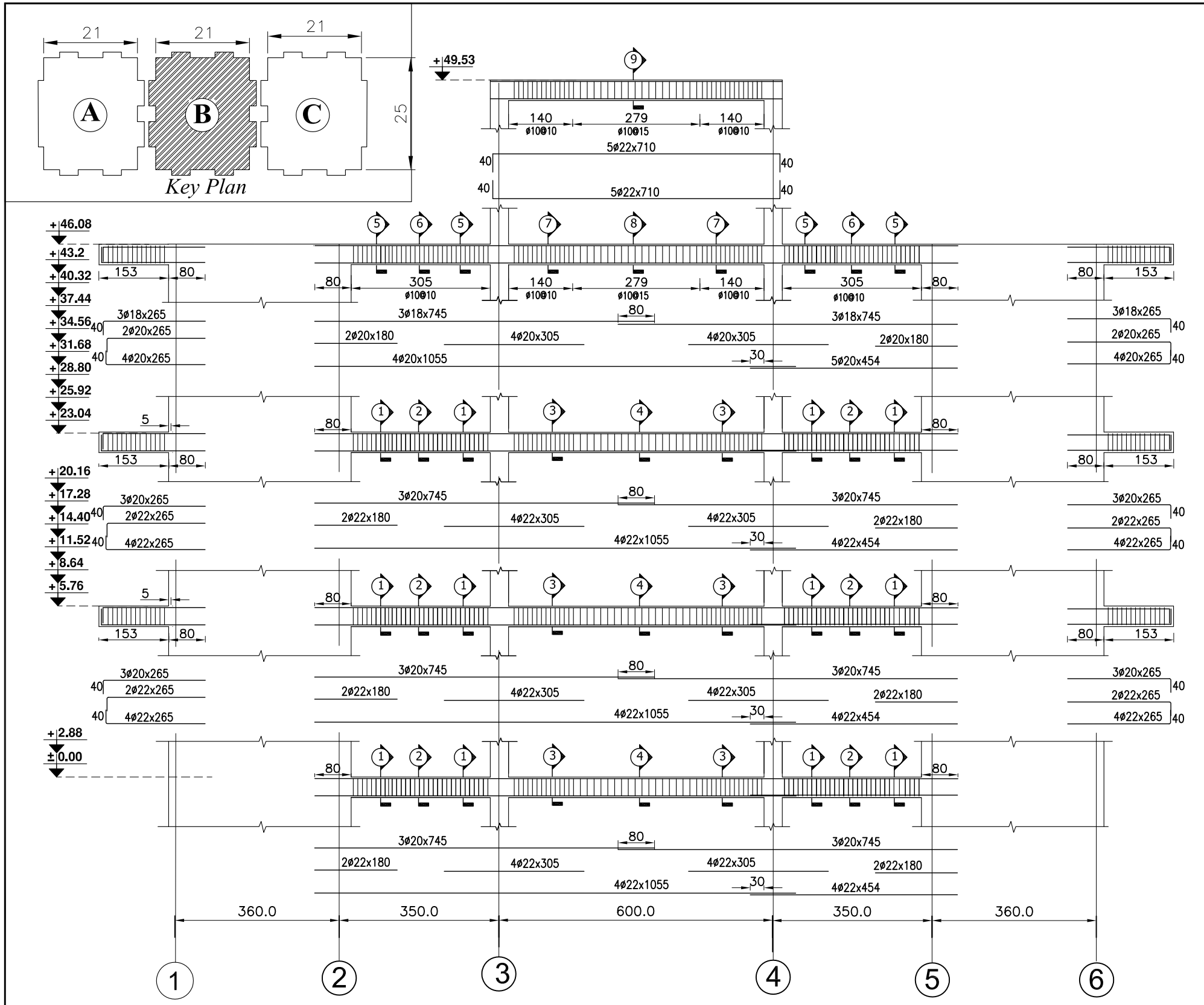

3 FRAME-3 (LONGITUDNAL REINFORCMENT)
SCALE: 1:120

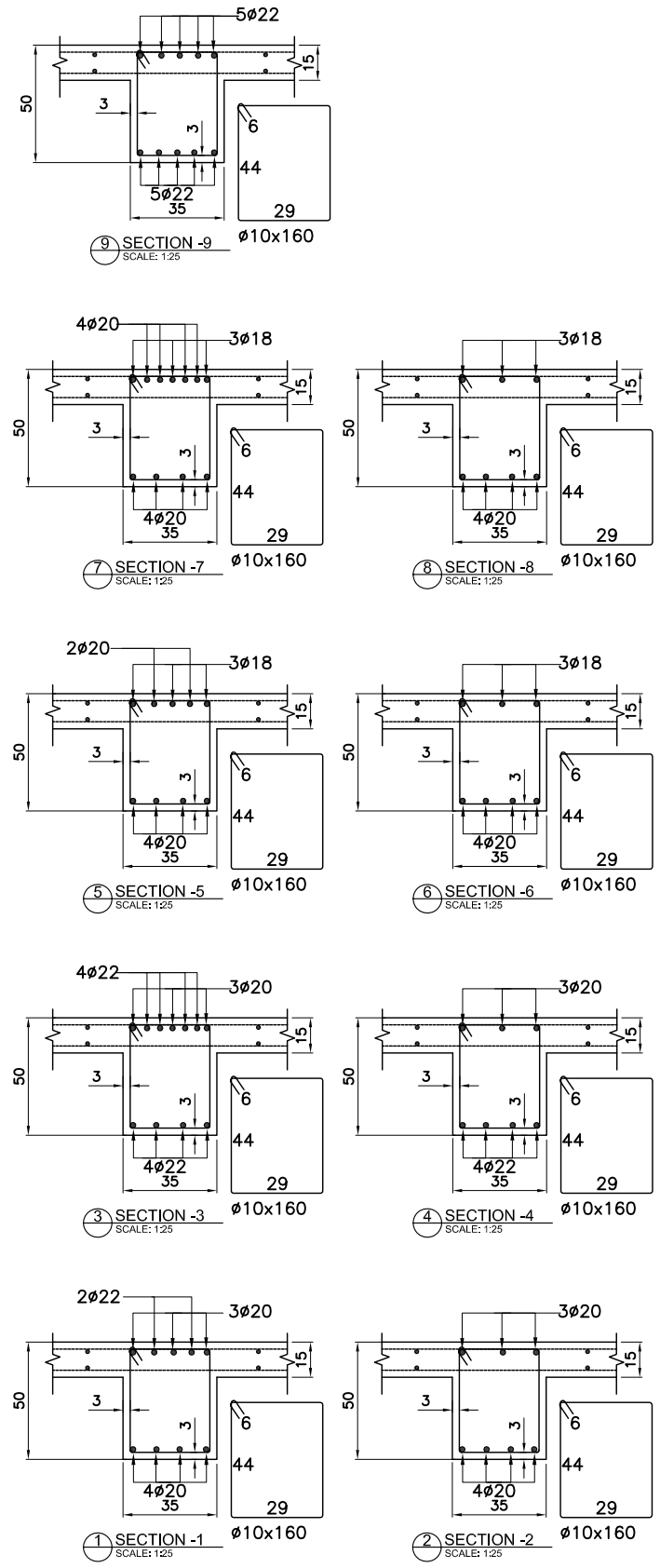

NOTES:

1. CONCRETE STRENGTH (Fc')=5000psi(350kg/cm2)
2. REBAR STRENGTH (Fy)=60000psi(4800kg/cm2)

DRAWING BY:	ABDUL WADOUD		GULISTAN RESIDENTIAL BLOCKS G7(16+1 STORIES PART)	FRAME-3 (LONGITUDNAL REINFORCMENT) STRUCTURAL DRAWINGS	SHEET NO: S-20
DESIGN BY:	KANISHKA KABIR				
CHECKED BY:	ENG ZAHER				

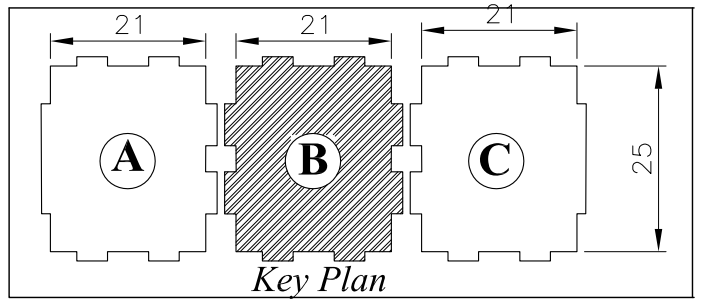

Key Plan

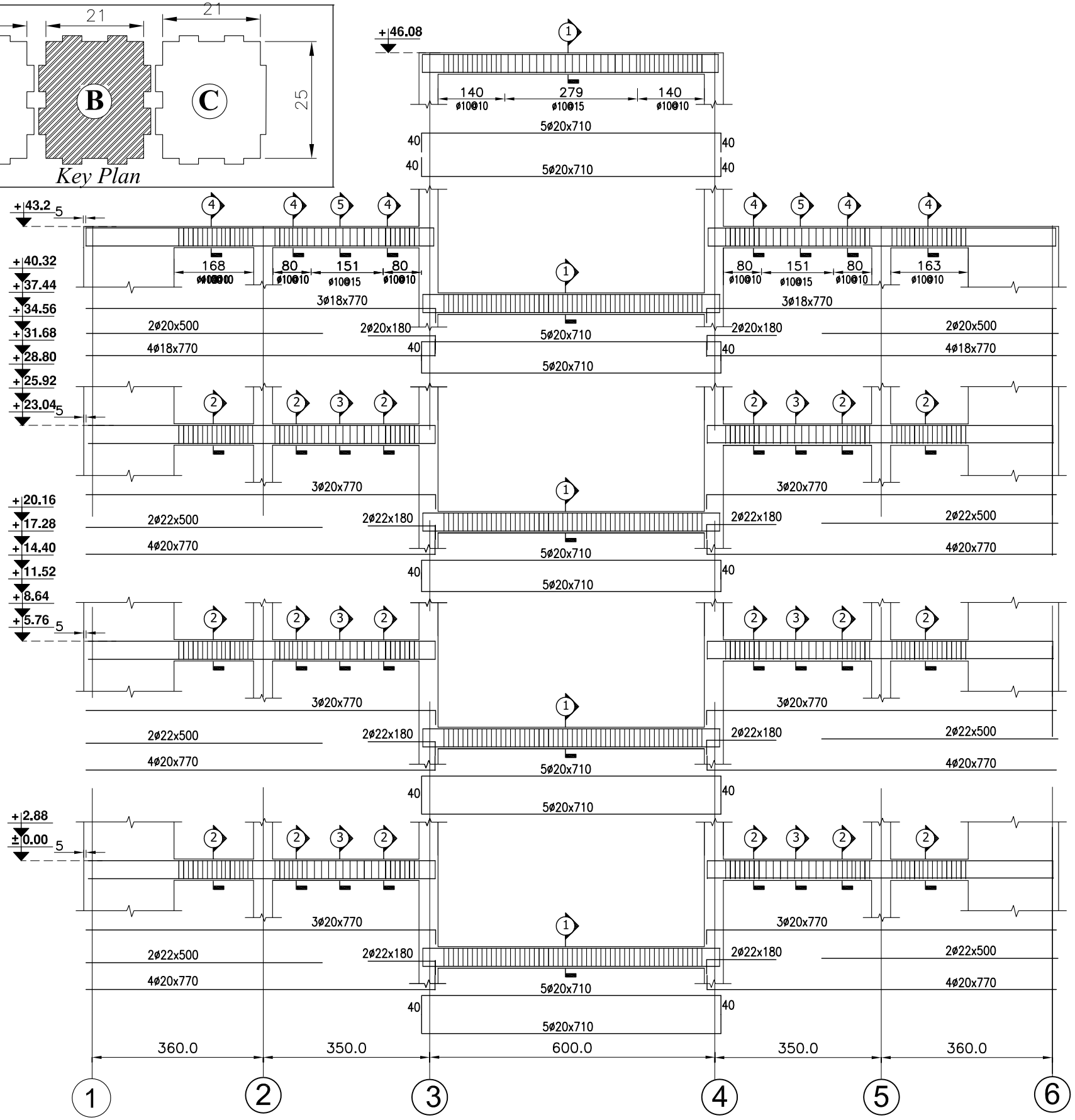

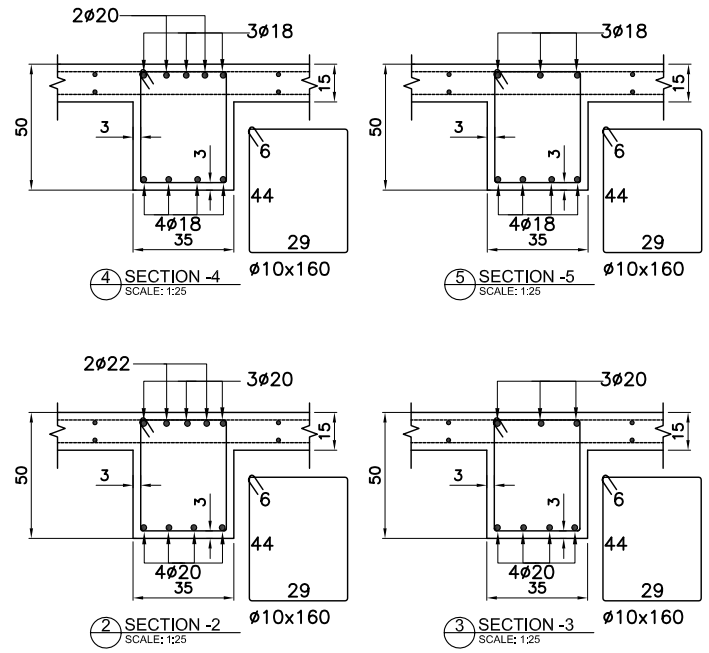

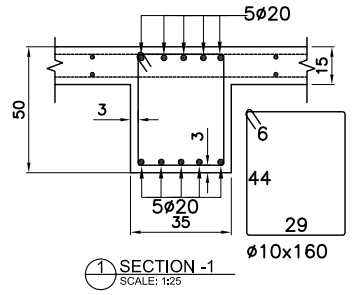

NOTES:

1. CONCRETE STRENGTH (Fc')=5000psi(350kg/cm2)
2. REBAR STRENGTH (Fy)=60000psi(4800kg/cm2)

4 FRAME-4 (LONGITUDNAL REINFORCMENT)

SCALE: 1:120

DRAWING BY:	ABDUL WADOUD		GULISTAN RESIDENTIAL BLOCKS G7(16+1 STORIES PART)	FRAME-4 (LONGITUDNAL REINFORCMENT) STRUCTURAL DRAWINGS	SHEET NO: S-21
DESIGN BY:	KANISHKA KABIR				
CHECKED BY:	ENG ZAHER				

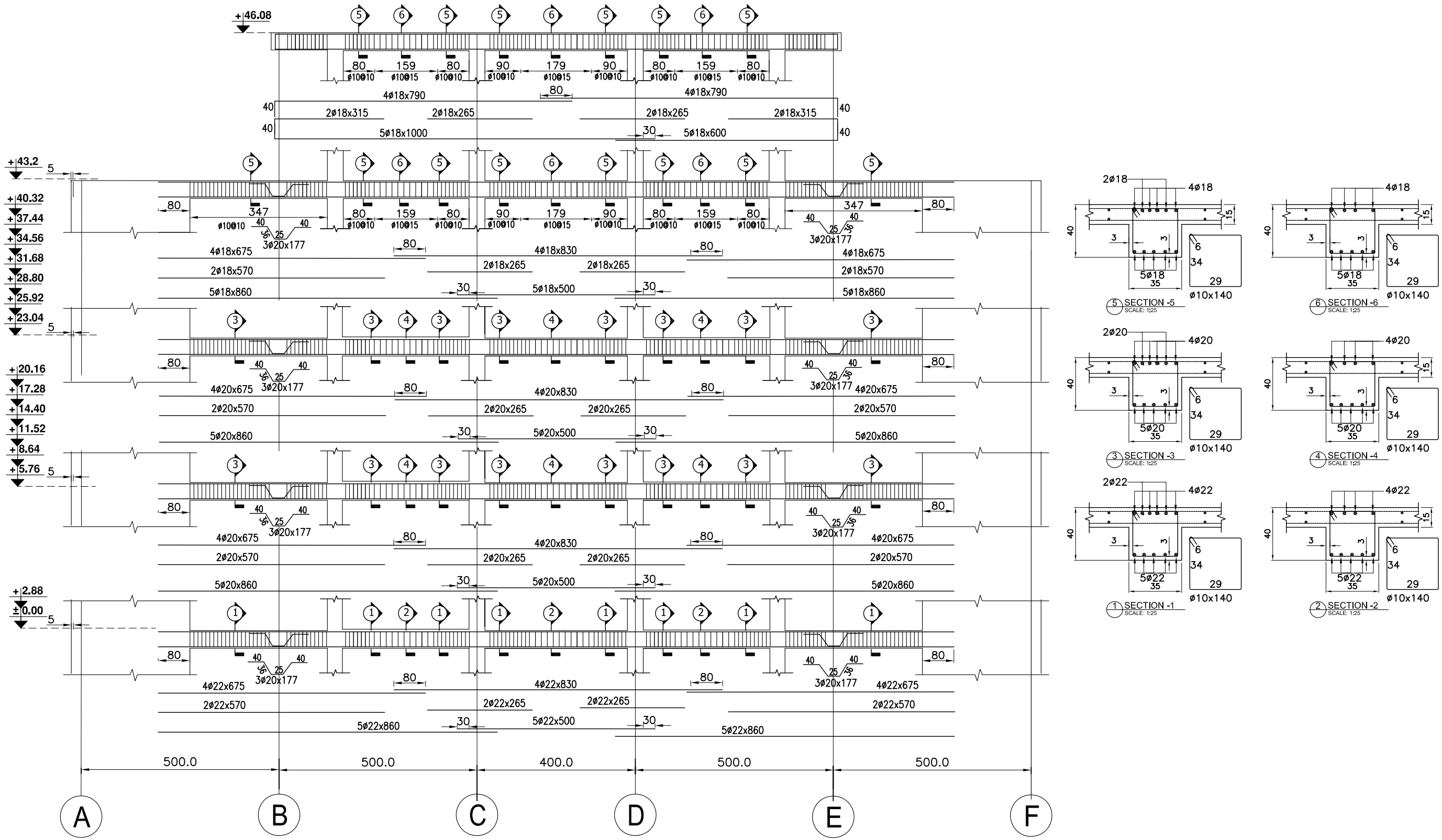

5 FRAME-5 (LONGITUDNAL REINFORCMENT)
SCALE: 1:120

NOTES:

1. CONCRETE STRENGTH (Fc')=5000psi(350kg/cm2)
2. REBAR STRENGTH (Fy)=60000psi(4800kg/cm2)

DRAWING BY:	ABDUL WADOUD		GULISTAN RESIDENTIAL BLOCKS G7(16+1 STORIES PART)	FRAME-5 (LONGITUDNAL REINFORCMENT) STRUCTURAL DRAWINGS	SHEET NO: S-22
DESIGN BY:	KANISHKA KABIR				
CHECKED BY:	ENG ZAHER				

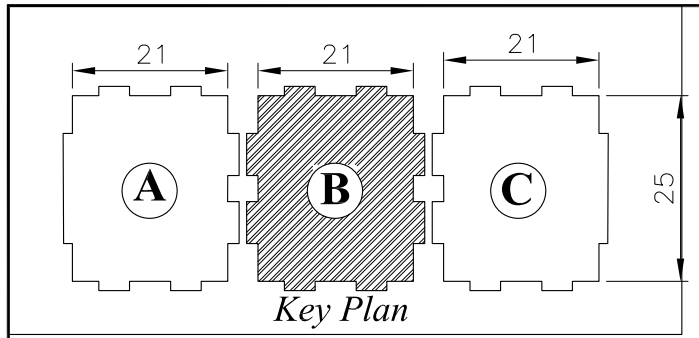

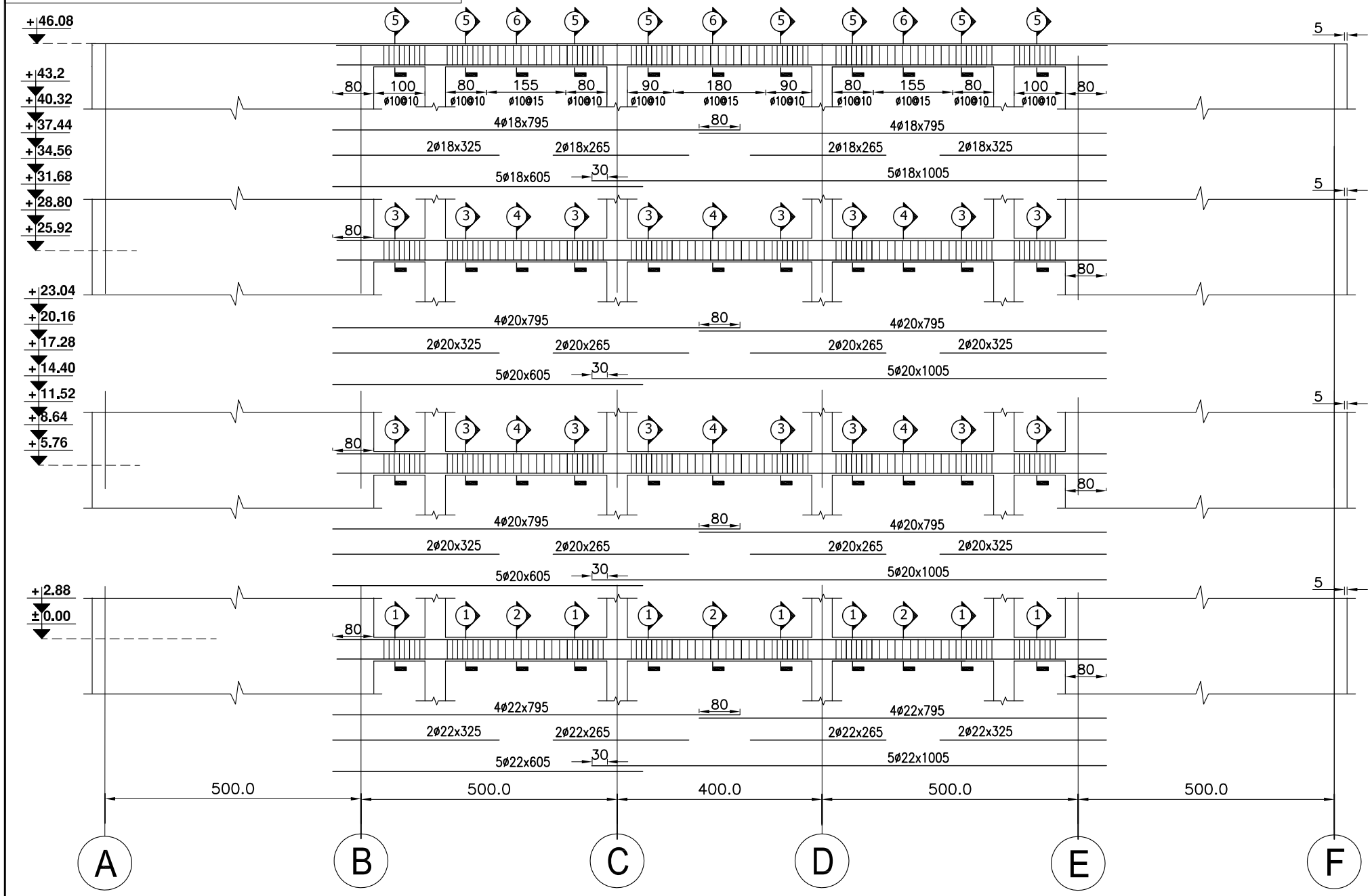

6 FRAME-6 (LONGITUDNAL REINFORCMENT)
SCALE: 1:120

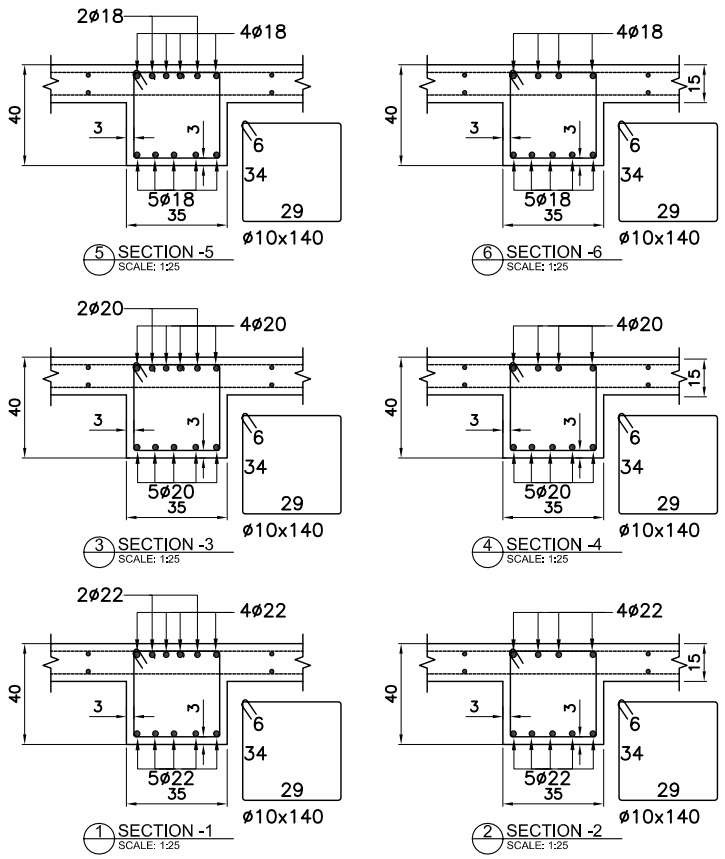

NOTES:

1. CONCRETE STRENGTH (Fc')=5000psi(350kg/cm2)
2. REBAR STRENGTH (Fy)=60000psi(4800kg/cm2)

DRAWING BY:	ABDUL WADOUD		GULISTAN RESIDENTIAL BLOCKS G7(16+1 STORIES PART)	FRAME-6 (LONGITUDNAL REINFORCMENT) STRUCTURAL DRAWINGS	SHEET NO: S-23
DESIGN BY:	KANISHKA KABIR				
CHECKED BY:	ENG ZAHER				

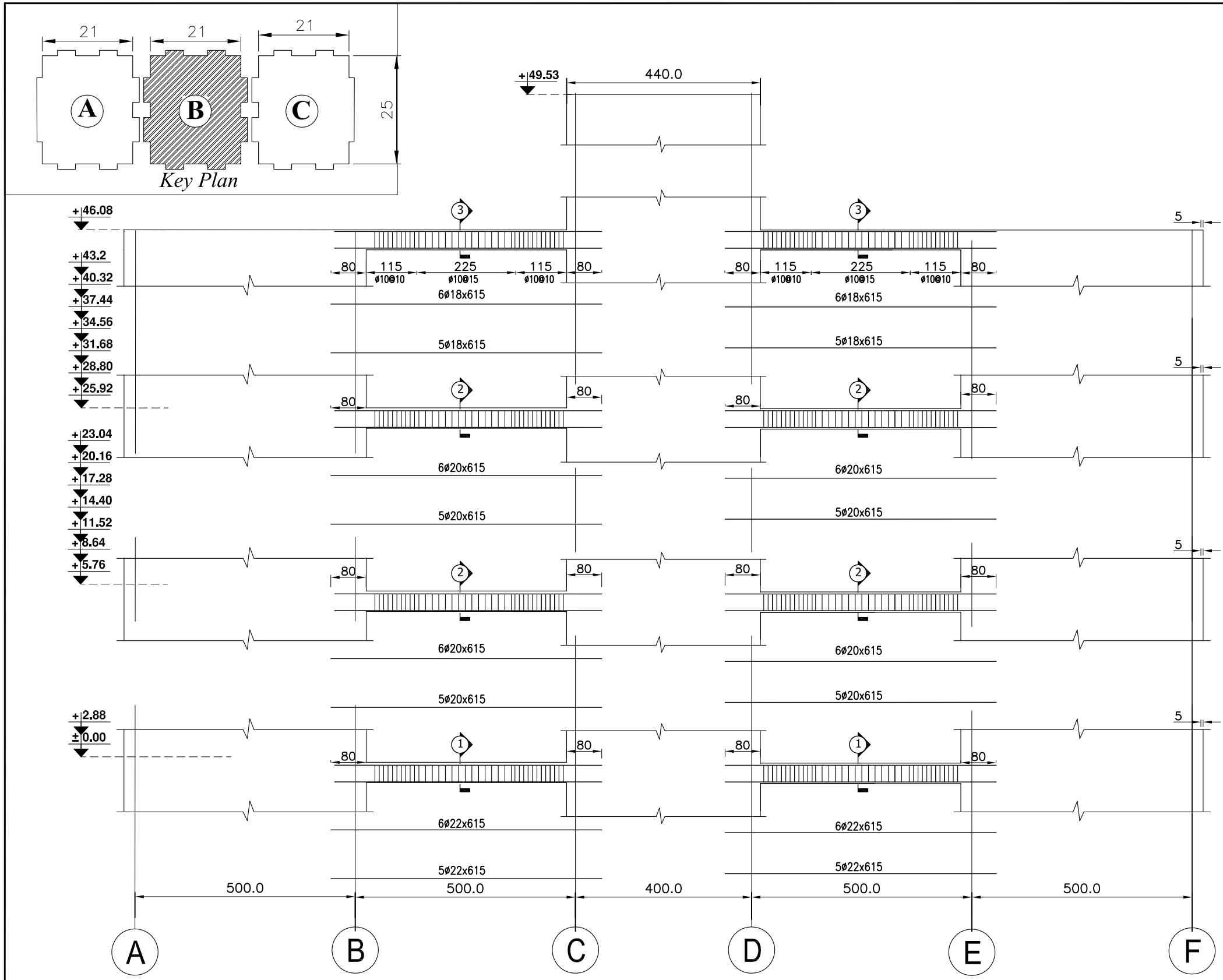

7 FRAME-7 (LONGITUDNAL REINFORCMENT)
SCALE: 1:120

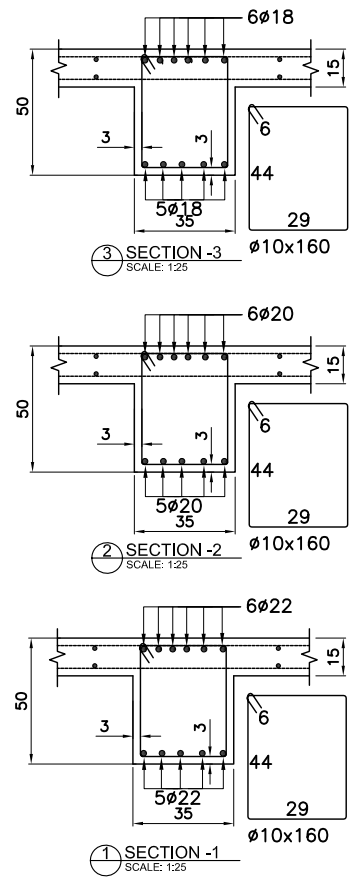

NOTES:

1. CONCRETE STRENGTH (Fc')=5000psi(350kg/cm2)
2. REBAR STRENGTH (Fy)=60000psi(4800kg/cm2)

DRAWING BY:	ABDUL WADOUD		GULISTAN RESIDENTIAL BLOCKS G7(16+1 STORIES PART)	FRAME-7 (LONGITUDNAL REINFORCMENT) STRUCTURAL DRAWINGS	SHEET NO: S-24
DESIGN BY:	KANISHKA KABIR				
CHECKED BY:	ENG ZAHER				

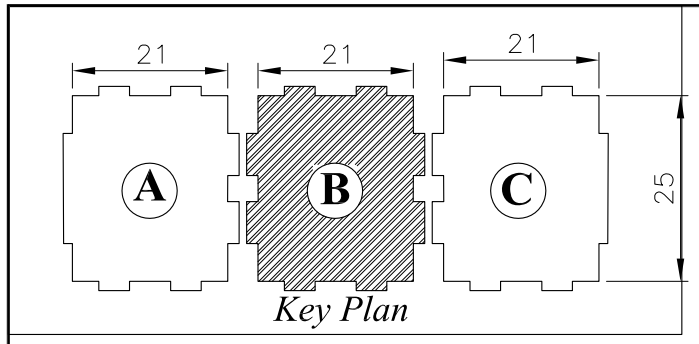

Key Plan

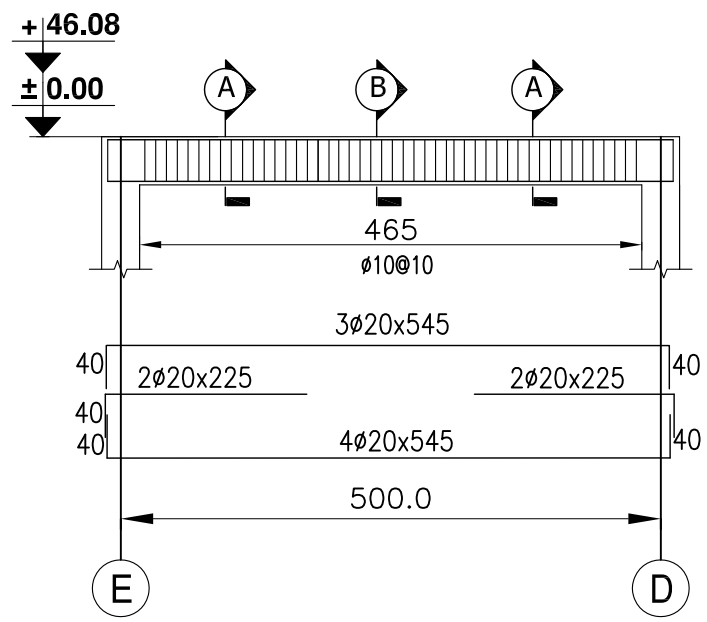

B1 BEAME REINFORCMENT)-B2
SCALE: 1:120

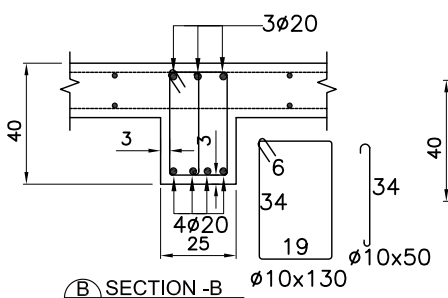

B SECTION -B
SCALE: 1:25

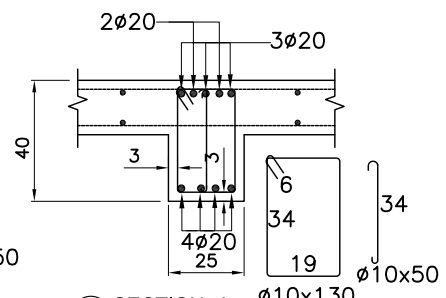

A SECTION -A
SCALE: 1:25

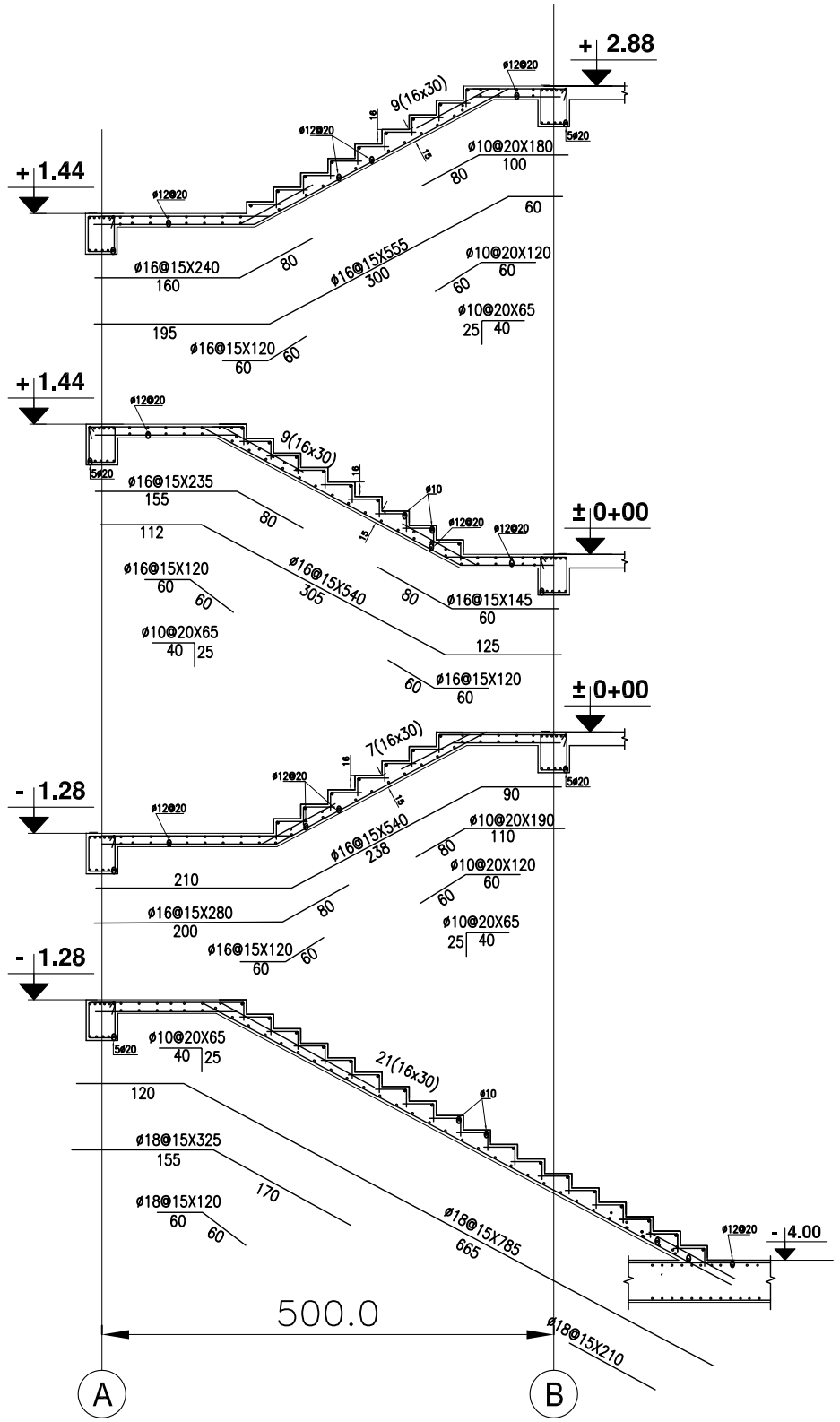

1 STAIR REINFORCEMENT
SCALE: 1:100

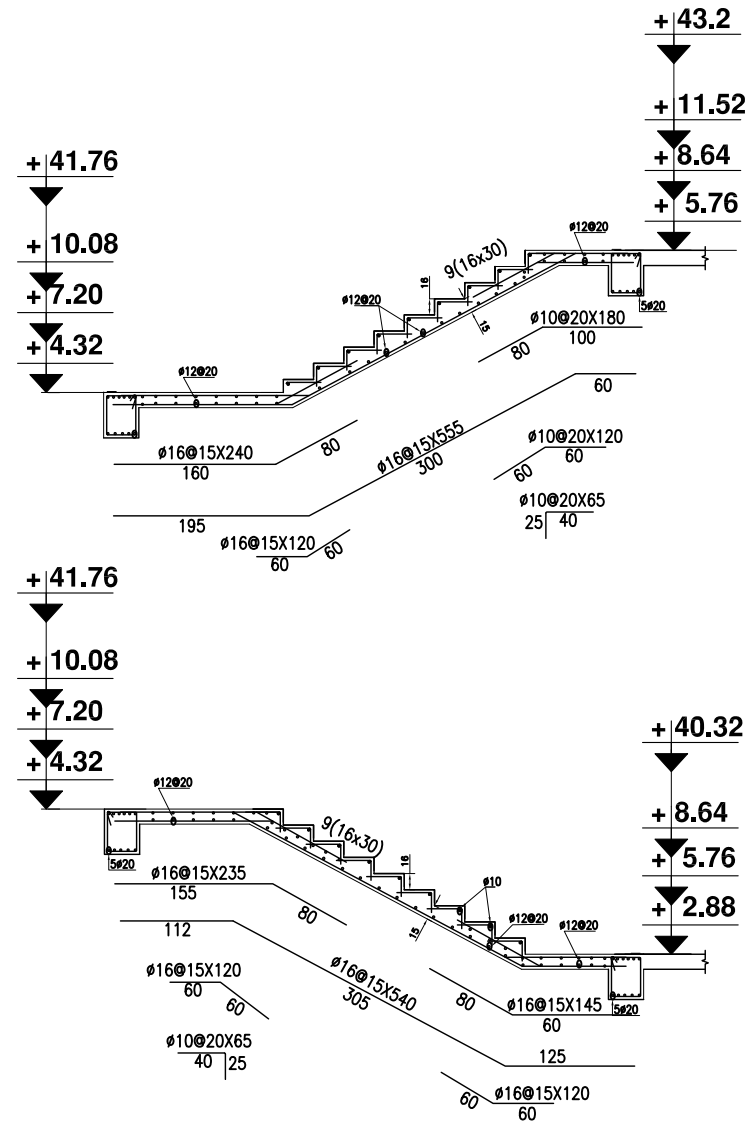

ST TYPICAL STAIR
SCALE: 1:

NOTES:

1. CONCRETE STRENGTH (Fc')=5000psi(350kg/cm2)
2. REBAR STRENGTH (Fy)=60000psi(4800kg/cm2)

DRAWING BY:	ABDUL WADOUD		GULISTAN RESIDENTIAL BLOCKS G7(16+1 STORIES PART)	STAIR REINFORCEMENT STRUCTURAL DRAWINGS	SHEET NO: S-25
DESIGN BY:	KANISHKA KABIR				
CHECKED BY:	ENG ZAHER				

GENERAL NOTE

A- FOUNDATION & EARTH WORK:

1- Excavation of foundation shall be done from natural ground level (shown in drawing) & footing should place in cutting not in filling.
2- Before the layout & construction of footing, the ground should be compacted by roller and shall be pass with 95% compaction test com.
3- Insulation (Isogam) of all side of periphery wall in basement floor as well as brick wall shall be done according to the drawing.
4- Foundation design is based on the values recommended in the geotechnical report qa=1.2 kg/cm2 (according geotecnical test report.)
5-all work shall be done under consideration of structural engineers.

B-RCC WORK:

1-All RCC work (footing, beam, column, slab & stairs) shall be done with (Fc= 350kg/cm2(5000psi),FY=4200kg/cm2(60000psi)denoted byΦ& Fy=4200kg/cm2 denoted by N)
2-placing,compacting,curing, frame work, testing of concrete & steel must be done according to the required specification.
3- all reinforced concrete shall be provided fro batch plant and poured with concrete pump.

C-MASONRY WORK:

1- Brick masonry (Fc=75 kg/cm2)to be used with 1:6 cement mortars Ss=1.28 S1=0.51
2- Stones masonry to be used with 1:4
3- Externals wall plaster to be used 1:5
4- internals wall plaster to be used 1:5
5- PCC for leveling course /roof/floor tiles shall be done with M15 (Fc=150kg/cm2).

D- COVER FOR STRUCTURAL ELEMENTS:

1- Footing..... 5cm
2- Beam.....3cm
3- Column..... 4cm
4- Slab/stairs..... 2.5cm

All construction materials (steel bar, concrete, brick ....)Must be tested /checked before usage to verify the required properties ,otherwise not used.

DRAWING BY:	ABDUL WADOUD		GULISTAN RESIDENTIAL BLOCKS G7(16+1 STORIES PART)	GENERAL NOTES	SHEET NO:	S-01
DESIGN BY:	KANISHKA KABIR					
CHECKED BY:	ENG. ZAHER					